THIS DRAWING IS UNPUBLISHED. RELEASED FOR PUBLICATION ,2006.
© COPYRIGHT 2006 BY TYCO ELECTRONICS CORPORATION. ALL RIGHTS RESERVED.

LOC	DIST
J	

REVISIONS 変更

P	LTR	DESCRIPTION	DATE	DWN	APVD
	A	RELEASED	17JAN06	T.T	Y.Y

−1: AS SHOWN

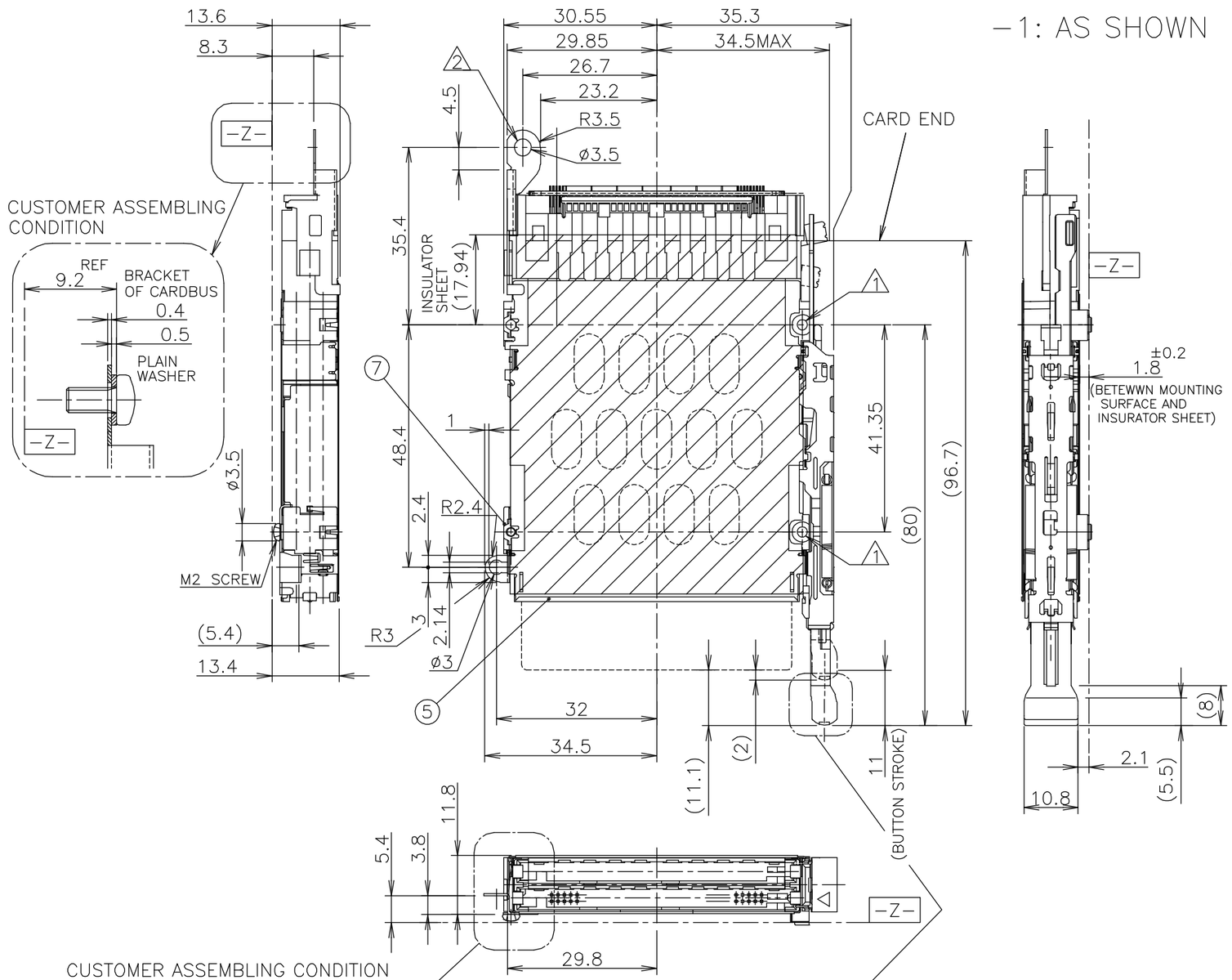

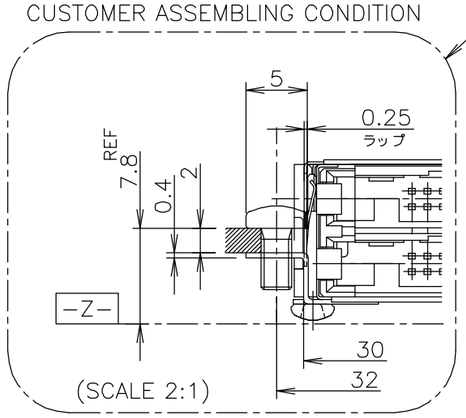

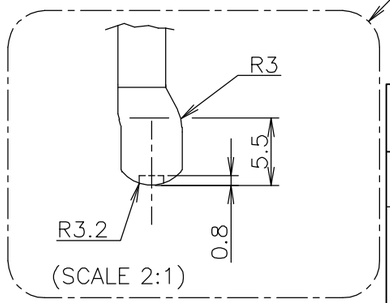

QTY	NAME	ITEM NO.
2	SPRING PIN	⑧
1	NUT (M2)	⑦
1	SHIELDING SHELL (LOWER)	⑥
1	SHIELDING SHELL (UPPER)	⑤
1	PUSH PUSH SUB ASSY (TOP,RIGHT)	④
1	HOUSING ARM (LEFT)	③
1	PWB (TOP MOUNT)	②
1	HEADER ASSEMBLY(TOP.RIGHT)	①

THIS DRAWING IS A CONTROLLED DOCUMENT.

DIMENSIONS: 単位： 粍 mm

TOLERANCES UNLESS OTHERWISE SPECIFIED: 一般公差

0 PLC	± 0.5
1 PLC	± 0.5
2 PLC	± 0.5
3 PLC	± 0.5
4 PLC	± 0.5
ANGLES	±

MATERIAL 材料

FINISH 仕上

DWN	T.TSUZAKI	13JAN06
CHK	T.FUTATSUGI	17JAN06
APVD	Y.YAMAMOTO	17JAN06
PRODUCT SPEC 製品規格	108−78192	
APPLICATION SPEC 取付適用規格		
WEIGHT	36gr	

tyco Electronics

Tyco Electronics AMP K.K.
Kawasaki, Japan

NAME 名称

CARD BUS
LOWER SLOT TOP MOUNT PUSH−PUSH TYPE

SIZE	CAGE CODE	DRAWING NO 番号	RESTRICTED TO
A3	00779	C−6376642	

CUSTOMER DRAWING

SCALE 尺度	SHEET	OF	REV
1:1	1	2	A

THIS DRAWING IS UNPUBLISHED. RELEASED FOR PUBLICATION , .
© COPYRIGHT BY TYCO ELECTRONICS CORPORATION. ALL RIGHTS RESERVED.

LOC J DIST

REVISIONS 変更

P	LTR	DESCRIPTION	DATE	DWN	APVD
		SEE SHEET 1			

−1 : AS SHOWN

0.6mm PITCH CARD EDGE CONNECTOR FOR THIS CARDBUS PRODUCTS

PARTS NUMBER	DESCRIPTION
6123215−1	HARD TRAY ASSY
6376045−1	ON TAPING(EMBOSS)

参考取付寸法（部品搭載面）
REFERENCE P.C.BOARD LAYOUT
(VIEW FROM CONN. MOUNTING SIDE)

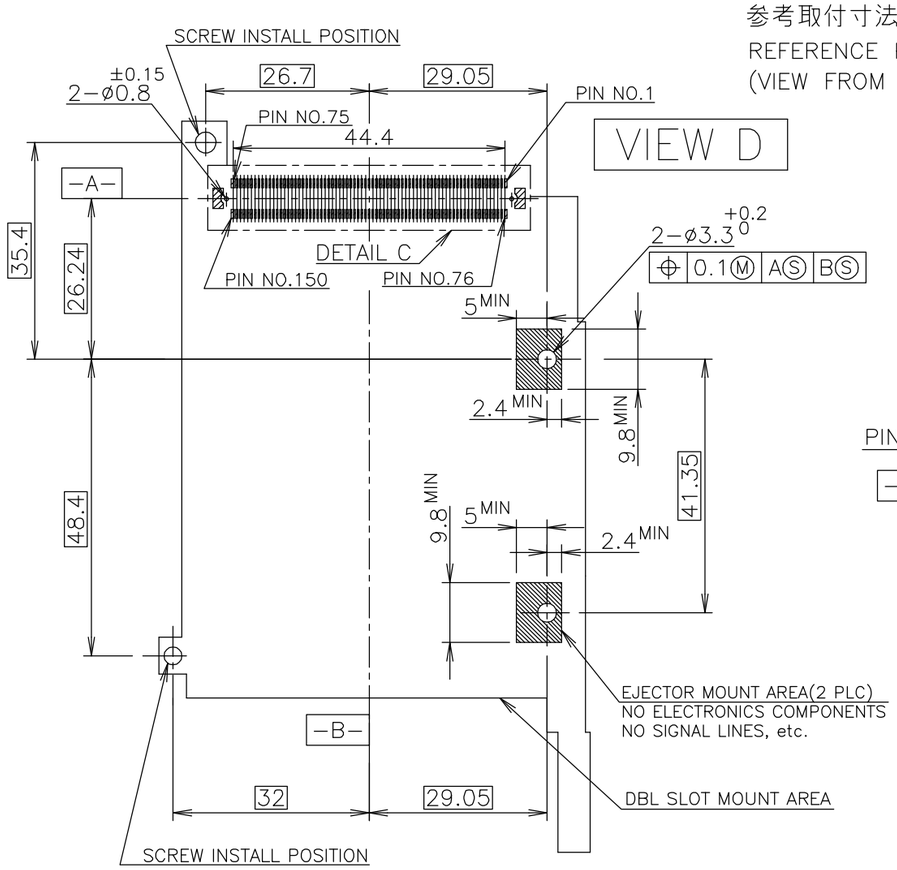

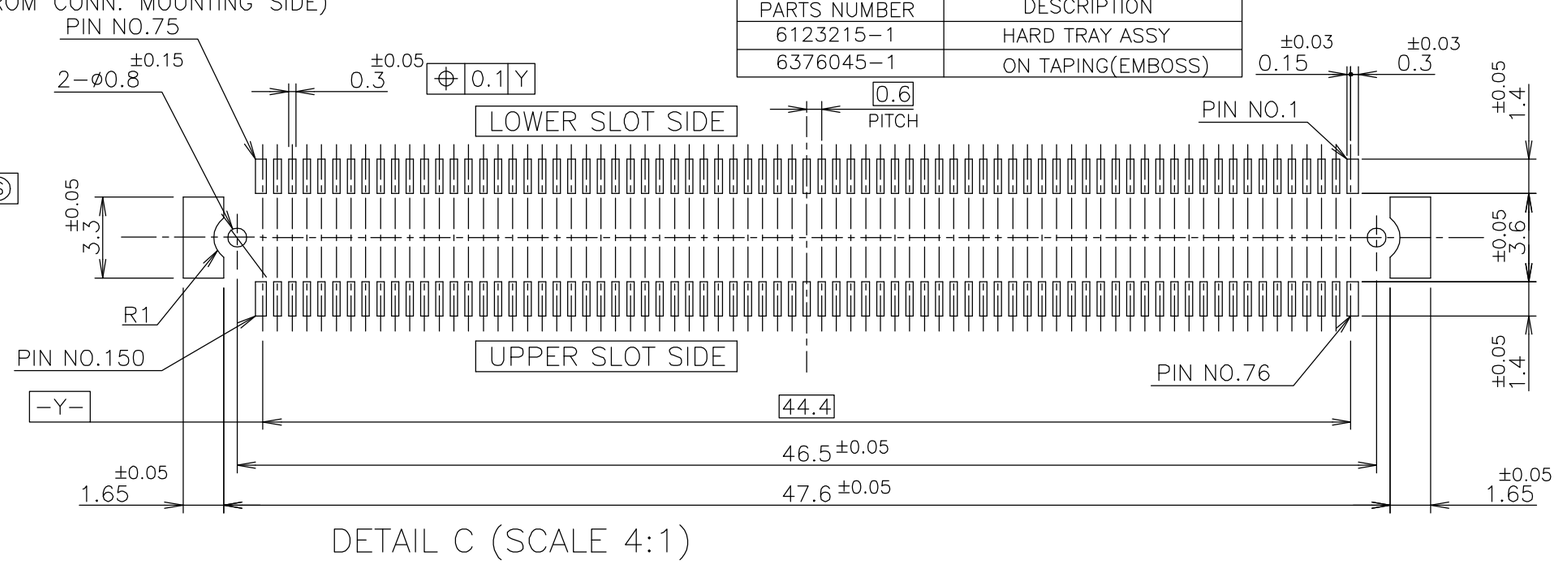

DETAIL C (SCALE 4:1)

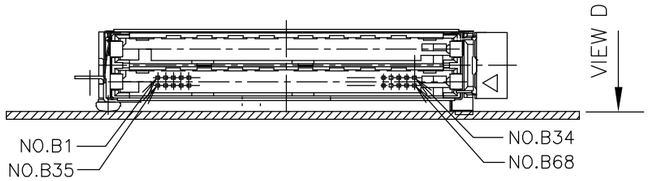

PIN ASSIGNMENT FOR TOP MOUNT

	PIN NO. REC CONN 150P	PIN NO. CARD BUS		PIN NO. REC CONN 150P	PIN NO. CARD BUS
COMMON	75	B35	LOWER SLOT	1	B68
	74	B1		2	B34
	73	B36		3	B67
	72	B2		4	B33
	71	B37		5	B66
	70	B3		6	B32
	69	B38		7	B65
	68	B4		8	B31
	67	G		9	G
	66	B39		10	B64
	65	B5		11	B30
	64	B40		12	B63
	63	B6		13	B29
	62	B41		14	B62
	61	B7		15	B28
	60	B42		16	B61
	59	G		17	G
	58	B8		18	B27
	57	B43		19	B60
	56	B9		20	B26
	55	B44		21	B59
	54	B10		22	B25
	53	B45		23	B58
	52	B11		24	B24
	51	G		25	G
	50	B46		26	B57
	49	B12		27	B23
	48	B47		28	B56
	47	B13		29	B22
	46	B48		30	B55
	45	B14		31	B21
	44	B49		32	B54
	43	G		33	G
	42	B15		34	B20
	41	B50		35	B53
	40	B16		36	B19
	39	B51 B17		37	NONE
	38	NONE		38	B52 B18
	37	B52 B18		39	B51 B17
	36	B19		40	B16
	35	B53		41	B50
	34	B20		42	B15
	33	G		43	G
	32	B54		44	B49
	31	B21		45	B14
	30	B55		46	B48
	29	B22		47	B13
	28	B56		48	B47
	27	B23		49	B12
	26	B57		50	B46
	25	G		51	G
	24	B24		52	B11
	23	B58		53	B45
	22	B25		54	B10
	21	B59		55	B44
	20	B26		56	B9
	19	B60		57	B43
	18	B27		58	B8
	17	G		59	G
	16	B61		60	B42
	15	B28		61	B7
	14	B62		62	B41
	13	B29		63	B6
	12	B63		64	B40
	11	B30		65	B5
	10	B64		66	B39
	9	G		67	G
	8	B31		68	B4
	7	B65		69	B38
	6	B32		70	B3
	5	B66		71	B37
	4	B33		72	B2
	3	B67		73	B36
	2	B34		74	B1
	1	B68		75	B35
COMMON			UPPER SLOT		

1. DBL SLOTの使用取付けねじは M2, P=0.4 である。(2箇所)
   (メートル並目ねじ、M2)
2. 推奨取付けネジ: M2.5
3. 推奨ネジ締め付けトルク: 0.15N·m~0.2N·m(1.5~2.0kgf·cm)
4. ネジの締め付け時のナット押し付け力: 14.7N(1.5kgf)以下
5. 適応PCカード: PCMCIA準拠のPCカード

1. DOUBLE SLOT INSTALLED SCREW (M2, P=0.4) (2 PLC)
2. RECOMMEND INSTALLED SCREW:M2.5
3. RECOMMENDED TIGHTENING TORQUE: 0.15~0.2N·m(1.5~2kgf·cm)
4. THE AXIAL FORCE TO NUTS WHEN MOUNTING CARDBUS: 14.7N(1.5kgf) MAX
5. APPLIED CARD: PCMCIA ATTRIBUTE PC CARD.

THIS DRAWING IS A CONTROLLED DOCUMENT.

DIMENSIONS: 単位: 耗 mm

TOLERANCES UNLESS OTHERWISE SPECIFIED: 一般公差

0 PLC	± 0.5
1 PLC	± 0.5
2 PLC	± 0.5
3 PLC	± 0.5
4 PLC	± 0.5
ANGLES	±

MATERIAL 材料 | FINISH 仕上 | WEIGHT

DWN | CHK | APVD | PRODUCT SPEC 製品規格 | APPLICATION SPEC 取付適用規格

tyco Electronics — Tyco Electronics AMP K.K. Kawasaki, Japan

NAME 名称: CARD BUS LOWER SLOT TOP MOUNT PUSH−PUSH TYPE

SIZE	CAGE CODE	DRAWING NO 番号	RESTRICTED TO
A3	00779	C−6376642	

CUSTOMER DRAWING | SCALE 尺度 1:1 | SHEET 2 OF 2 | REV A