THIS DRAWING IS UNPUBLISHED. RELEASED FOR PUBLICATION 2007
© COPYRIGHT 2007 BY TYCO ELECTRONICS CORPORATION. ALL RIGHTS RESERVED.

LOC	DIST
GW	–

REVISIONS

P	LTR	DESCRIPTION	DATE	DWN	APVD
	51	First issue	11JUN2007	AM	DB
	52	Update drawing	18JUN2007	AM	DB
	A	Go to production	25JUN2007	AM	DB

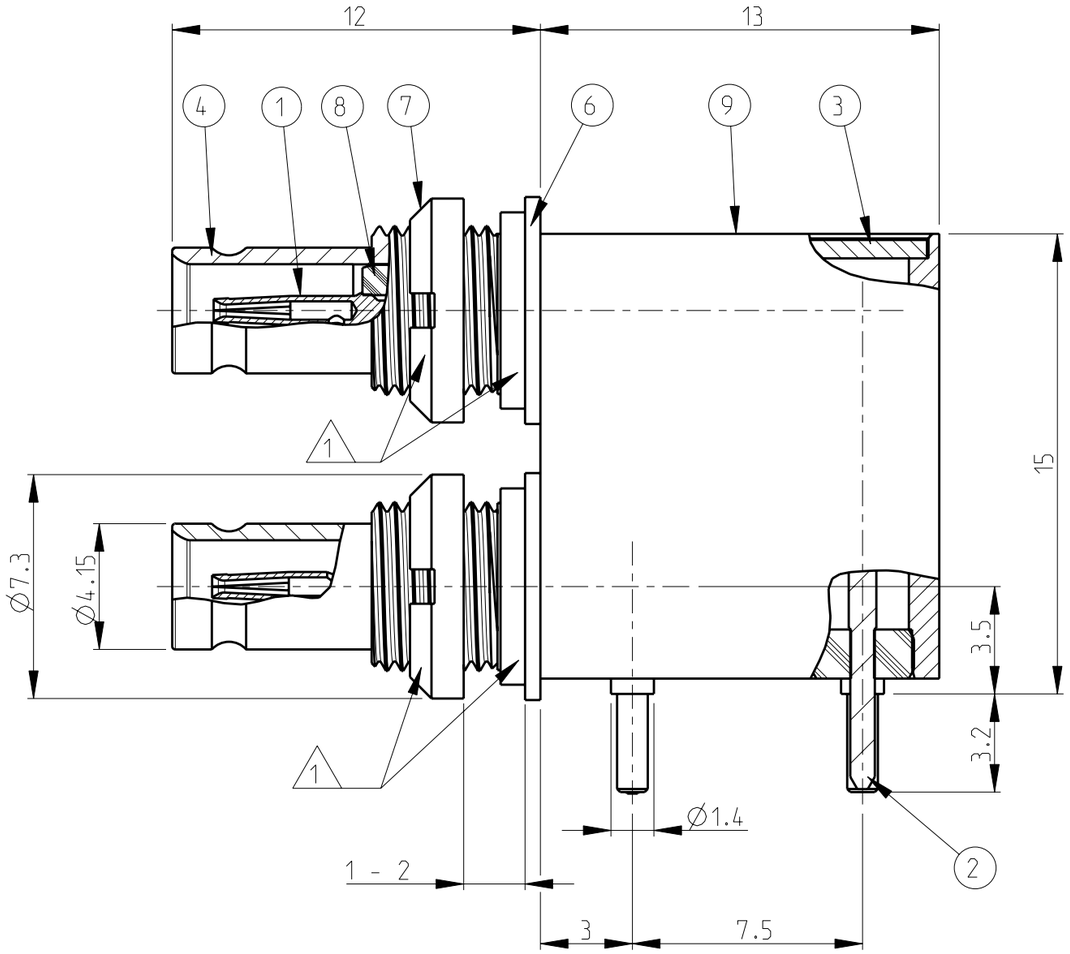

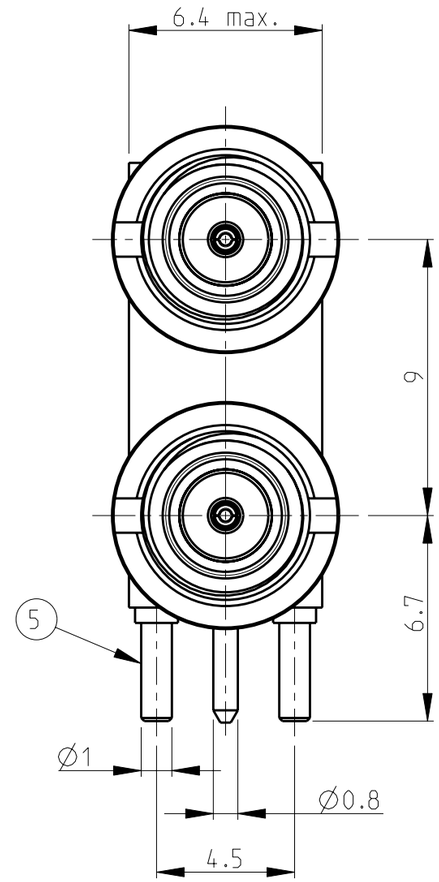

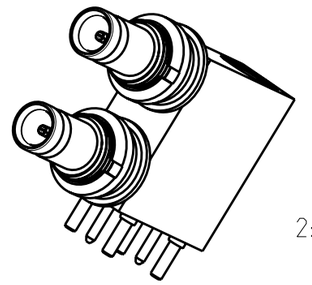

2:1

2. Mating face according to DIN 47297 and CECC 22230

1 Supplied as loose part

Recommended PCB layout

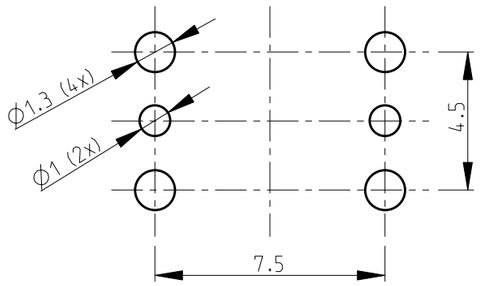

Dimensions of washer

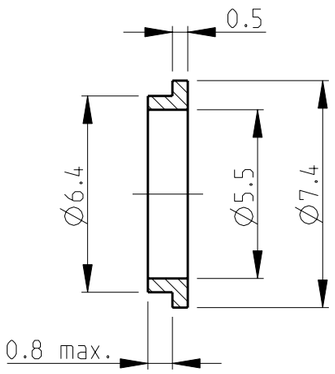

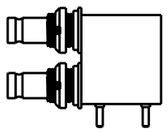

1:1

Frontpanel

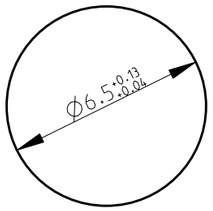

Part Nr	Description	Item	Material	Plating
619324-1	Body	9	Brass	2 µm Ni min.
	Dielectric	8	PTFE	-
	Nut	7	Brass	2 µm Ni min.
	Washer	6	Brass	2 µm Ni min.
	Outer con. pin	5	Brass	3 µm Sn min. over Ni
	Outer Con.	4	Brass	0.1 µm Au min over 2 µm NiP min
	Cap	3	CuNi18Zn20	-
	Center con. pin	2	Brass	3 µm Sn min. over Ni
	Center Con.	1	Cu Be / BZ4	0.1 µm Au min over 2 µm NiP min

THIS DRAWING IS A CONTROLLED DOCUMENT FOR TYCO ELECTRONICS CORPORATION IT IS SUBJECT TO CHANGE AND THE CONTROLLING ENGINEERING ORGANIZATION SHOULD BE CONTACTED FOR THE LATEST REVISION.

DIMENSIONS: mm

TOLERANCES UNLESS OTHERWISE SPECIFIED:
0 PLC ±
1 PLC ±
2 PLC ±
3 PLC ±
4 PLC ±
ANGLES ±

MATERIAL –
FINISH –

DWN A.Mariotti 11JUN2007
CHK D.Bozzer 11JUN2007
APVD D.Bozzer 11JUN2007
PRODUCT SPEC 108-71032
APPLICATION SPEC –
WEIGHT –

tyco Electronics
Tyco Electronics
Lugano - Switzerland

NAME
RIGHT-ANGLE BULKHEAD JACK
WITH PCB CONNECTION
DIN 1.0-2.3 75 Ohm

SIZE	CAGE CODE	DRAWING NO	RESTRICTED TO
A3	00779	C-619324	-

CUSTOMER DRAWING

SCALE	SHEET	OF	REV
5:1	1	1	A