THIS DRAWING IS UNPUBLISHED. RELEASED FOR PUBLICATION 2006
© COPYRIGHT 2006 BY TYCO ELECTRONICS CORPORATION. ALL RIGHTS RESERVED.

LOC	DIST
IS	–

REVISIONS

P	LTR	DESCRIPTION	DATE	DWN	APVD
	51	First issue	06NOV2006	AM	DB
	A	Release to production	05DEC2006	AM	DB

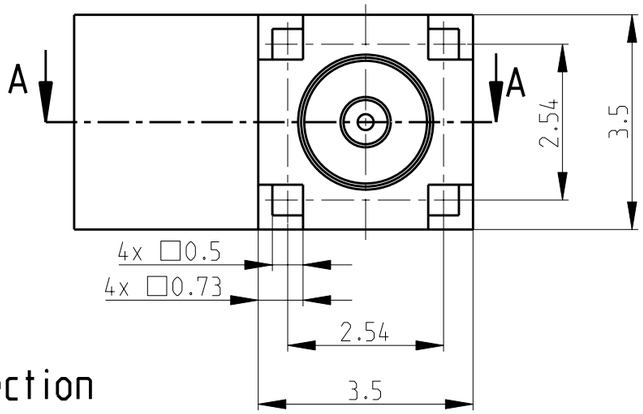

1. GENERAL TOLERANCES: ISO 2768-m-H
2. Last running acc. to IEC 60286-3
3. Blister belt filled with parts
4. 400mm empty blister belt, sealed with cover tape

RECOMENDED PCB LAYOUT
TOLERANCE : ± 0.05

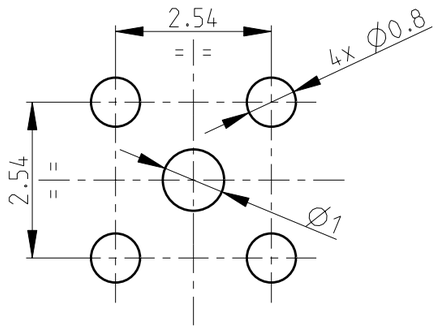

Partial section
A-A

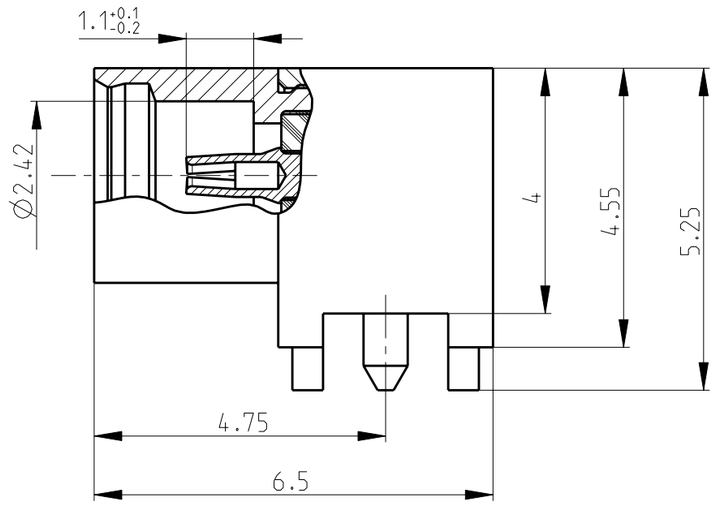

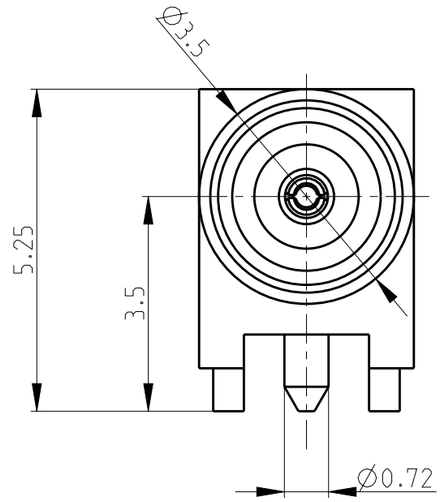

Surface for pick and place vacuum nozzle device

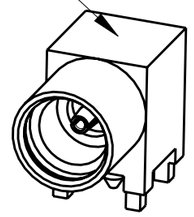

3D view
5:1

Reel detail
1:5

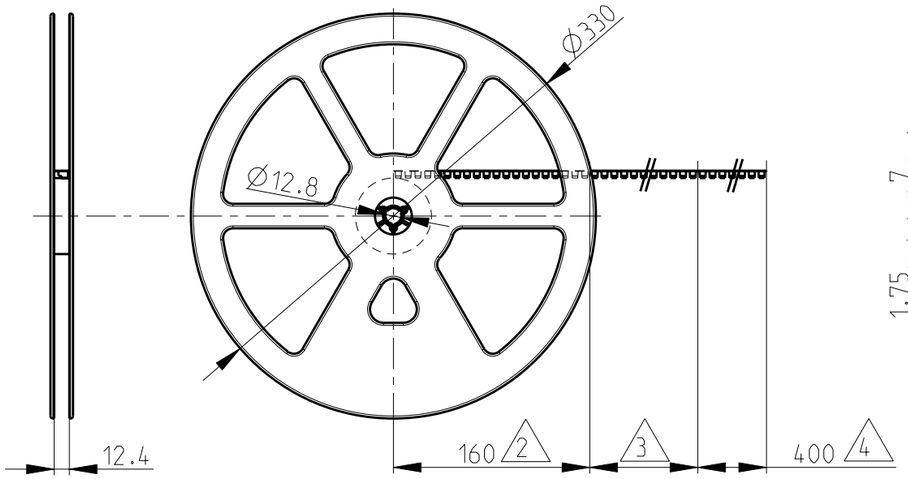

Tape detail
2:1

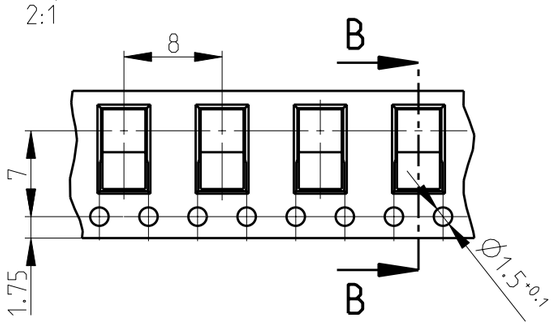

B-B

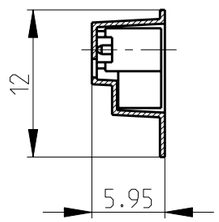

Tyco Nr	Description	Material	Plating
619287-1	Dielectric	PTFE	-
	Outer Con.	Brass	Plated Au over NiP
	Center Con.	CuBe	Plated Au over NiP

Packaging : 1000 pcs in tape on reel according IEC 60286-3
Further characteristics as per EIA-481

Suggested Pick and place dimension : Ø 3.5 mm

1:1

THIS DRAWING IS A CONTROLLED DOCUMENT FOR TYCO ELECTRONICS CORPORATION. IT IS SUBJECT TO CHANGE AND THE CONTROLLING ENGINEERING ORGANIZATION SHOULD BE CONTACTED FOR THE LATEST REVISION.

DIMENSIONS: mm

TOLERANCES UNLESS OTHERWISE SPECIFIED:
0 PLC ±
1 PLC ±
2 PLC ±
3 PLC ±
4 PLC ±
ANGLES ±1°

MATERIAL –
FINISH –

DWN A.Mariotti 06NOV2006
CHK D. Bozzer 06NOV2006
APVD – –
PRODUCT SPEC –
APPLICATION SPEC –
WEIGHT –

tyco Electronics
tyco Electronics
Lugano (Switzerland)

NAME MMCX Jack 90° PCB Pin in Paste

SIZE	CAGE CODE	DRAWING NO	RESTRICTED TO
A3	00779	C-619287	–

CUSTOMER DRAWING
SCALE 10:1 SHEET 1 OF 1 REV A

AMP 1470-19 REV 31MAR2000