THIS DRAWING IS UNPUBLISHED. RELEASED FOR PUBLICATION ,2006.
© COPYRIGHT 2006 BY TYCO ELECTRONICS CORPORATION. ALL RIGHTS RESERVED.

LOC	DIST
J	

REVISIONS 変更

P	LTR	DESCRIPTION	DATE	DWN	APVD
	A	RELEASED	10AUG06	T.T	Y.Y

AS SHOWN: −1(本図)

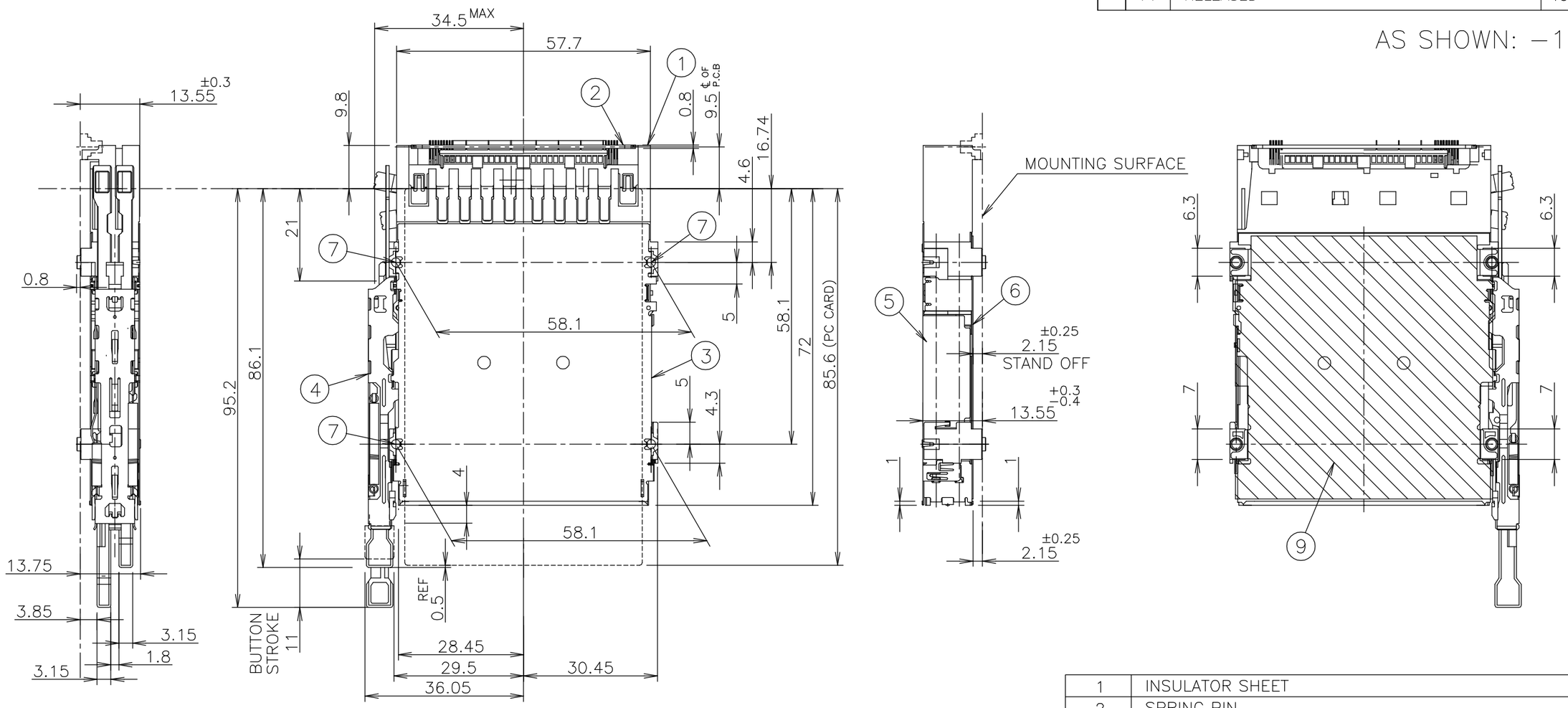

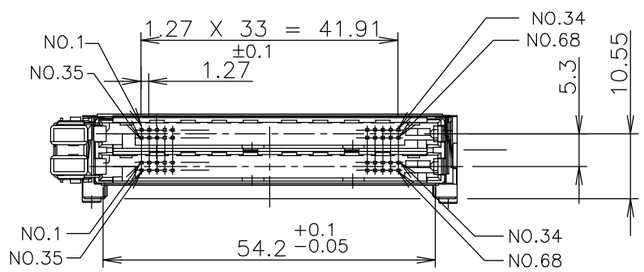

数量 QTY	名称 NAME	ITEM
1	INSULATOR SHEET	9
2	SPRING PIN	8
4	NUT (M2)	7
1	SHIELDING SHELL (LOWER)	6
1	SHIELDING SHELL (UPPER)	5
1	PUSH PUSH SUB ASSY (TOP,LEFT),DARK BLUE BUTTONS	4
1	HOUSING ARM (RIGHT)	3
1	PWB (TOP MOUNT)	2
1	HEADER ASSEMBLY(TOP.LEFT)	1

1 推奨ねじ締め付けトルク: 0.15N·m(1.5kg·cm)から0.2N·m(2kg·cm)
2 ネジの締め付け時のナット押し付け力: 14.7N(1.5Kgf)以下
3 適応PCカード: PCMCIA準拠のPCカード

1 RECOMMENDED TIGHTENING TORUQUE
:FROM 0.15N·m(1.5kg·cm) TO 0.2N·m(2kg·cm)
2 THE AXIAL FORCE TO NUTS WHEN MOUNTING CARDBUS: 14.7N(1.5Kgf) MAX
3 APPLIED CARD: PCMCIA ATTRIBUTE PC CARD.

THIS DRAWING IS A CONTROLLED DOCUMENT.

DIMENSIONS: 単位: 耗 mm

TOLERANCES UNLESS OTHERWISE SPECIFIED: 一般公差

0 PLC	± 0.5
1 PLC	± 0.5
2 PLC	± 0.5
3 PLC	± 0.5
4 PLC	± 0.5
ANGLES	± −

MATERIAL 材料

FINISH 仕上

DWN	T.TSUZAKI	10AUG06
CHK	T.FUTATSUGI	10AUG06
APVD	Y.YAMAMOTO	10AUG06
PRODUCT SPEC 製品規格	108−78192	
APPLICATION SPEC 取付適用規格		
WEIGHT	37gr	

tyco Electronics

Tyco Electronics AMP K.K.
Kawasaki, Japan

NAME 名称

CARD BUS
DOUBLE SLOT TOP MOUNT PUSH−PUSH TYPE

SIZE	CAGE CODE	DRAWING NO 番号	RESTRICTED TO
A3	00779	C−6123834	

CUSTOMER DRAWING

SCALE 尺度	SHEET	OF	REV
1:1	1	2	A

AMP 1470−19 REV 31MAR2000

L:\EN22_PE_CAD\FJ014986_Tsuzaki\Pb−free\C−6123834.dwg

THIS DRAWING IS UNPUBLISHED. RELEASED FOR PUBLICATION , .
© COPYRIGHT BY TYCO ELECTRONICS CORPORATION. ALL RIGHTS RESERVED.

LOC	DIST
J	

REVISIONS 変更

P	LTR	DESCRIPTION	DATE	DWN	APVD
	—	SEE SHEET 1	–	—	—

0.6mm PITCH CARD EDGE CONNECTOR FOR THIS CARDBUS PRODUCTS

PARTS NUMBER	DESCRIPTION
6123215-1	HARD TRAY ASSY
6376045-1	ON TAPING(EMBOSS)

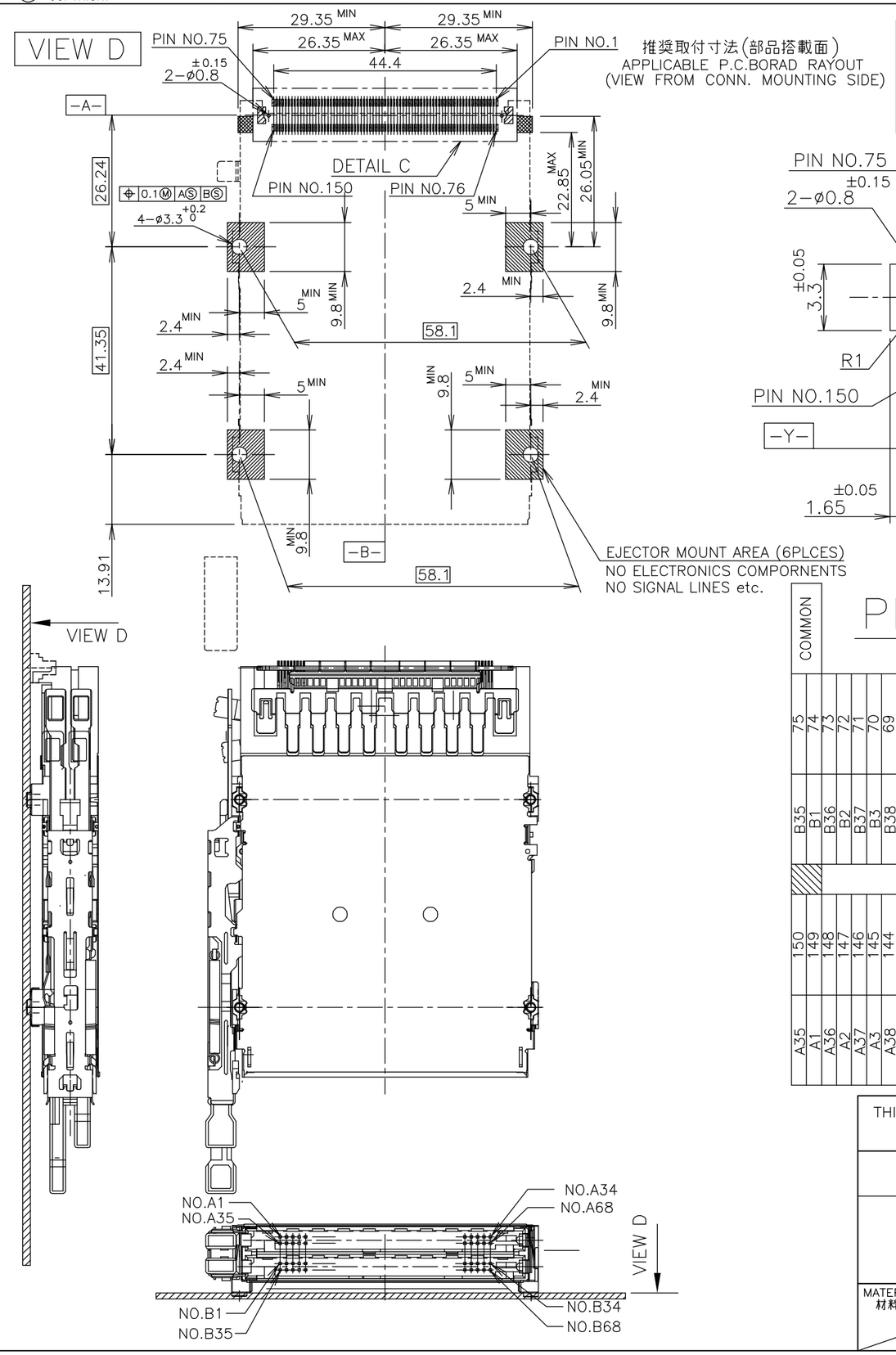

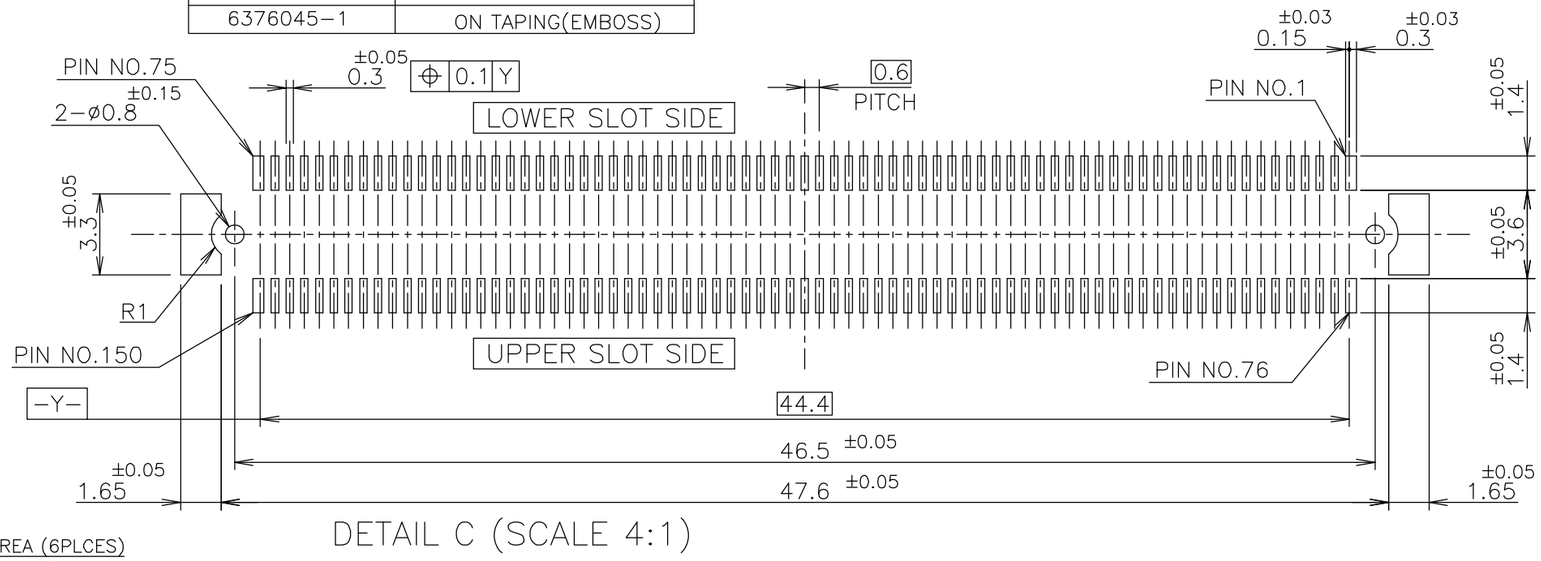

DETAIL C (SCALE 4:1)

PIN ASSIGNMENT

FOR TOP MOUNT

COMMON

PIN NO. REC CONN 150P	PIN NO. CARD BUS		PIN NO. REC CONN 150P	PIN NO. CARD BUS
75	B35		150	A35
74	B1		149	A1
73	B36		148	A36
72	B2		147	A2
71	B37		146	A37
70	B3		145	A3
69	B38		144	A38
68	B4		143	A4
67	G		142	G
66	B39		141	A39
65	B5		140	A5
64	B40		139	A40
63	B6		138	A6
62	B41		137	A41
61	B7		136	A7
60	B42		135	A42
59	G		134	G
58	B8		133	A8
57	B43		132	A43
56	B9		131	A9
55	B44		130	A44
54	B10		129	A10
53	B45		128	A45
52	B11		127	A11
51	G		126	G
50	B46		125	A46
49	B12		124	A12
48	B47		123	A47
47	B13		122	A13
46	B48		121	A48
45	B14		120	A14
44	B49		119	A49
43	G		118	G
42	B15		117	A15
41	B50		116	A50
40	B16		115	A16
39	B51 B17		114	A51 A17
38	NONE		113	NONE
37	B52 B18		112	A52 A18
36	B19		111	A19
35	B53		110	A53
34	B20		109	A20
33	G		108	G
32	B54		107	A54
31	B21		106	A21
30	B55		105	A55
29	B22		104	A22
28	B56		103	A56
27	B23		102	A23
26	B57		101	A57
25	G		100	G
24	B24		99	A24
23	B58		98	A58
22	B25		97	A25
21	B59		96	A59
20	B26		95	A26
19	B60		94	A60
18	B27		93	A27
17	G		92	G
16	B61		91	A61
15	B28		90	A28
14	B62		89	A62
13	B29		88	A29
12	B63		87	A63
11	B30		86	A30
10	B64		85	A64
9	G		84	G
8	B31		83	A31
7	B65		82	A65
6	B32		81	A32
5	B66		80	A66
4	B33		79	A33
3	B67		78	A67
2	B34		77	A34
1	B68		76	A68

LOWER SLOT

UPPER SLOT

THIS DRAWING IS A CONTROLLED DOCUMENT.

DIMENSIONS: 単位： 粍 mm

TOLERANCES UNLESS OTHERWISE SPECIFIED: 一般公差

0 PLC	± 0.5
1 PLC	± 0.5
2 PLC	± 0.5
3 PLC	± 0.5
4 PLC	± 0.5
ANGLES	± –

MATERIAL 材料

FINISH 仕上

DWN

CHK

APVD

PRODUCT SPEC 製品規格

APPLICATION SPEC 取付適用規格

WEIGHT

CUSTOMER DRAWING

tyco Electronics

Tyco Electronics AMP K.K.
Kawasaki, Japan

NAME 名称

CARD BUS
DOUBLE SLOT TOP MOUNT PUSH-PUSH TYPE

SIZE	CAGE CODE	DRAWING NO 番号	RESTRICTED TO
A3	00779	C-6123834	

SCALE 尺度	SHEET	OF	REV
1:1	2	2	A

AMP 1470-19 REV 31MAR2000

L:\EN22_PE_CAD\FJ014986_Tsuzaki\Pb-free\C-6123834.dwg