THIS DRAWING IS UNPUBLISHED. RELEASED FOR PUBLICATION 20
© COPYRIGHT 20 BY - ALL RIGHTS RESERVED.

REVISIONS

P	LTR	DESCRIPTION	DATE	DWN	APVD
	K	LC20-0017-15 / ECO-15-001875	30JAN2015	DM	BJ

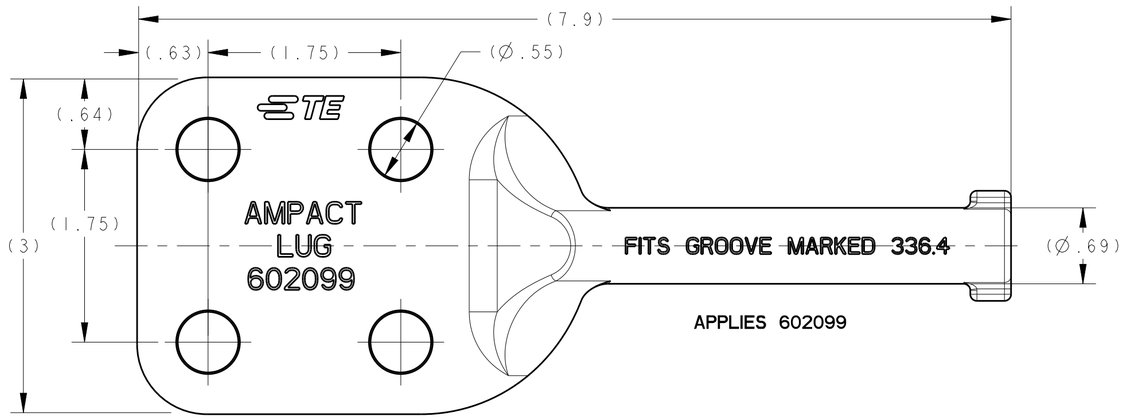

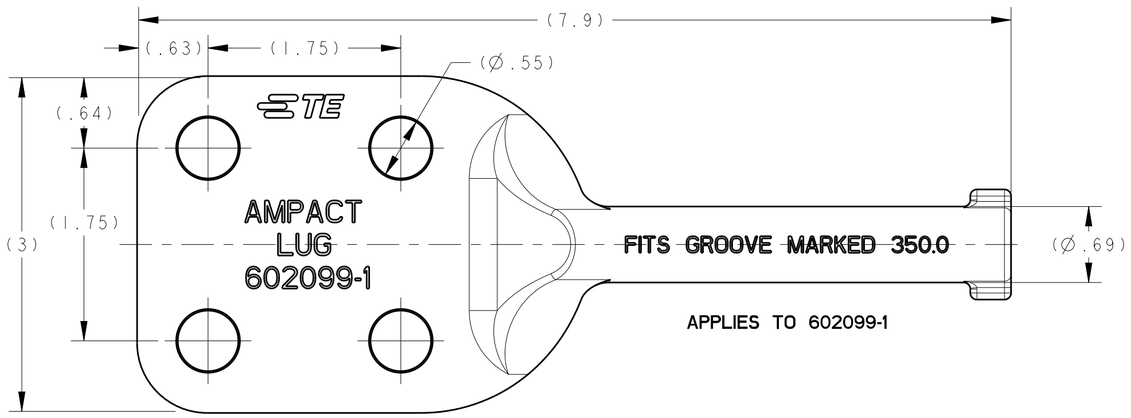

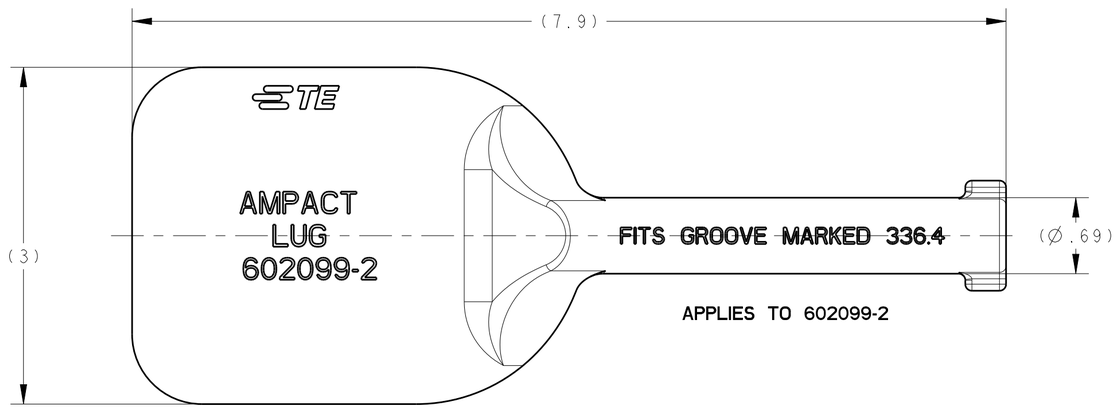

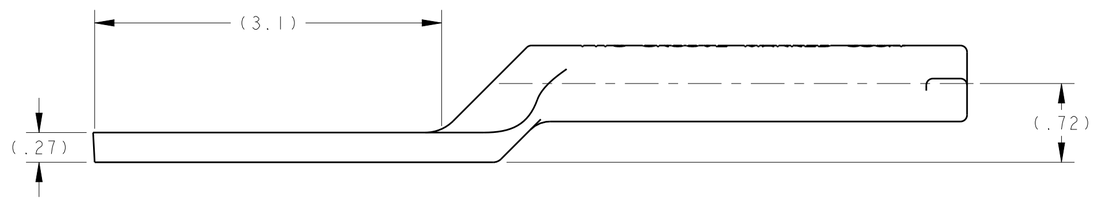

0.47 lbs	AL ALLOY	602099-2
1.45 lbs	CU ALLOY	602099-1
0.44 lbs	AL ALLOY	602099
WEIGHT	MATERIAL	PART NO.

THIS DRAWING IS A CONTROLLED DOCUMENT.

DIMENSIONS: INCHES

TOLERANCES UNLESS OTHERWISE SPECIFIED:
0 PLC ±
1 PLC ±
2 PLC ±
3 PLC ±
4 PLC ±
ANGLES ±

MATERIAL: SEE TABLE

FINISH: -

DWN D. ROBITAILLE
CHK B. GARY 13DEC1974
APVD C.B. 13DEC1974

PRODUCT SPEC: -

APPLICATION SPEC: -

WEIGHT: SEE TABLE

Customer Drawing

TE Connectivity

NAME: TERMINAL LUG, 4 HOLE PADDLE, 336.4 KCMIL, AMPACT

SIZE	CAGE CODE	DRAWING NO	RESTRICTED TO
A2	-	C-602099	-

SCALE 1:1 SHEET 1 OF 1 REV K

1471-9 (3/13)