THIS DRAWING IS UNPUBLISHED. RELEASED FOR PUBLICATION 20
© COPYRIGHT 20 BY - ALL RIGHTS RESERVED.

LOC	DIST
GA	1

REVISIONS

P	LTR	DESCRIPTION	DATE	DWN	APVD
	K	LC20-0036-15 / ECO-15-004322	20MAR2015	JG	BJ

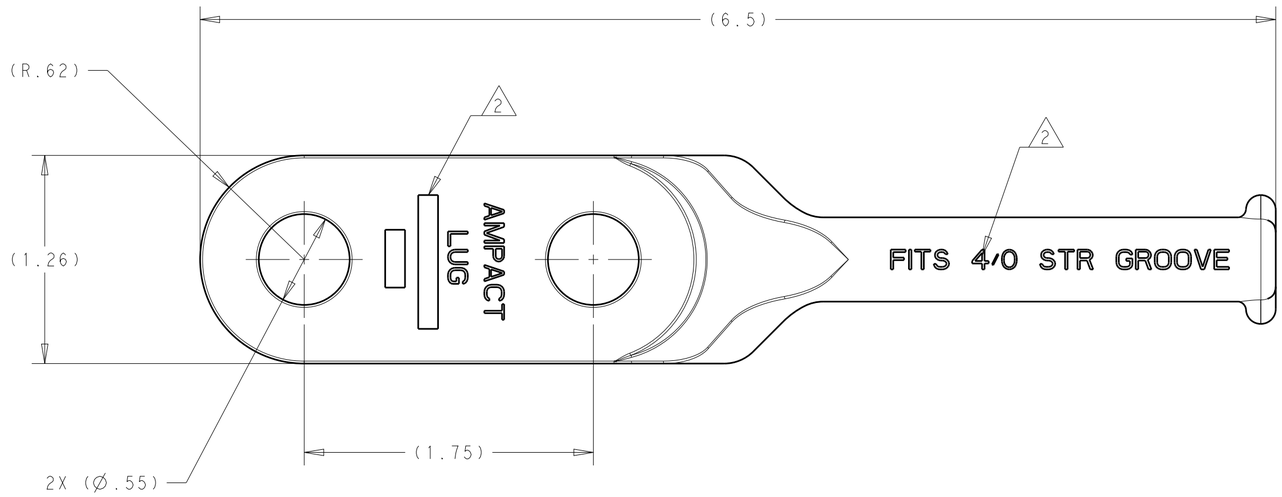

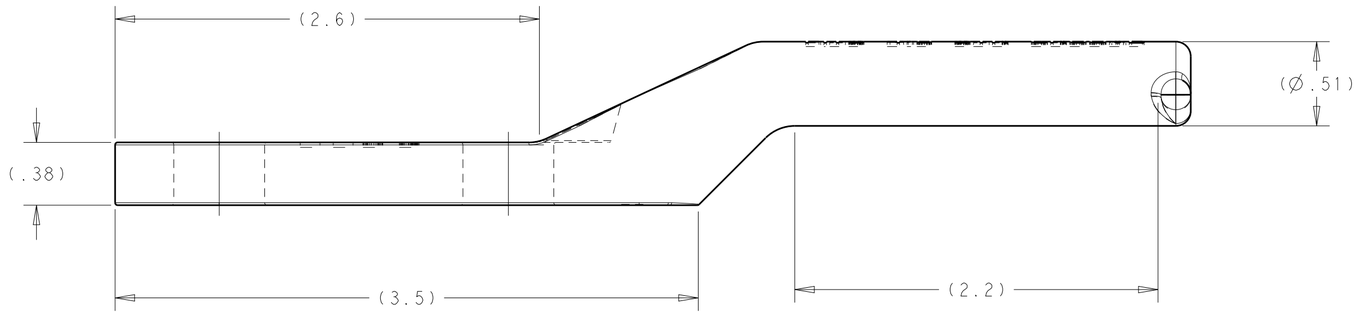

1. ACCOMMODATES:
   4/0 STANDARD STRANDED CONDUCTOR
   GROOVE SIZE.

2. MARKING:

   AMPACT LUG
   [PART NO.]
   [CONDUCTOR GROOVE SIZE]

3. ALL DIMENSIONS ARE FOR REFERENCE ONLY.

WEIGHT	MARKING 2	MATERIAL	PART NO.
0.73 lbs	602089-3	CU ALLOY	602089-3
0.22 lbs	602089	AL ALLOY	602089

THIS DRAWING IS A CONTROLLED DOCUMENT.

DIMENSIONS: INCHES

TOLERANCES UNLESS OTHERWISE SPECIFIED:
0 PLC ±
1 PLC ±
2 PLC ±
3 PLC ±
4 PLC ±
ANGLES ±

MATERIAL: SEE TABLE

FINISH: -

DWN J. GUPPY 12MAR2015
CHK D. MURUGIAH 16MAR2015
APVD B. JOHNSON 16MAR2015

PRODUCT SPEC: -

APPLICATION SPEC: -

WEIGHT: SEE TABLE

CUSTOMER DRAWING

TE Connectivity

NAME: TERMINAL LUG, 2 HOLE PADDLE, 4/0 STR GROOVE SIZE, AMPACT

SIZE	CAGE CODE	DRAWING NO	RESTRICTED TO
A2	00779	C-602089	-

SCALE NTS | SHEET 1 OF 1 | REV K

1471-9 (3/11)