REVISIONS				
ZONE	REV	DESCRIPTION	DATE	APPROVED
	A	RELEASE	10/7/92	DARB
	B	7990-2372	12/9/93	

SPECIFICATIONS

ELECTRICAL

RESISTANCE: 20K, ±10%

ELECTRICAL ANGLE: 340°

LINEARITY: INDEPENDENT, ±.5%

OUTPUT SMOOTHNESS: 0.1% MAX

RESISTANCE TEMPERATURE COEFFICIENT: ±400 PPM/°C MAX

POWER RATING: 1.0 WATTS @ 70°C

DIELECTRIC STRENGTH: 1000 VRMS

INSULATION RESISTANCE: 100 MEGOHMS MIN

MECHANICAL

ROTATION: CONTINUOUS 360°

TORQUE: .25 IN. OZ. START MAX, .2 IN. OZ. RUN MAX

ENVIRONMENTAL

ROTATIONAL LIFE: 50 MILLION CYCLES MINIMUM

OPERATING TEMPERATURE: −65°C TO +125°C

ALL OTHER ELECTRICAL, MECHANICAL AND ENVIRONMENTAL PER MIL-R-39023

MATERIALS

HOUSING: ANODIZED ALUMINUM
SHAFT: PASSIVATED CENTERLESS GROUND SST
BEARINGS: PRECISION MINIATURE BALL
ROTOR: BERYLLIUM COPPER
CONTACTS: MULTIFINGER PRECIOUS METAL
ELEMENT: CO-MOLDED CONDUCTIVE PLASTIC
TERMINALS: GOLD PLATED

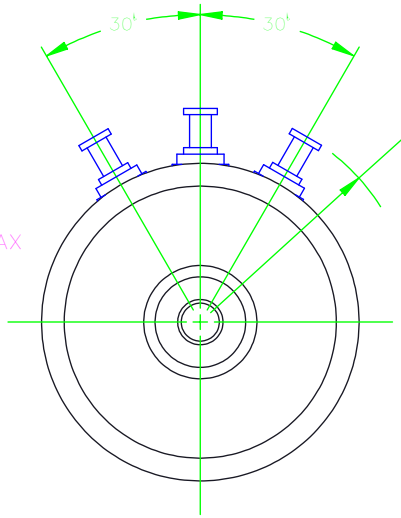

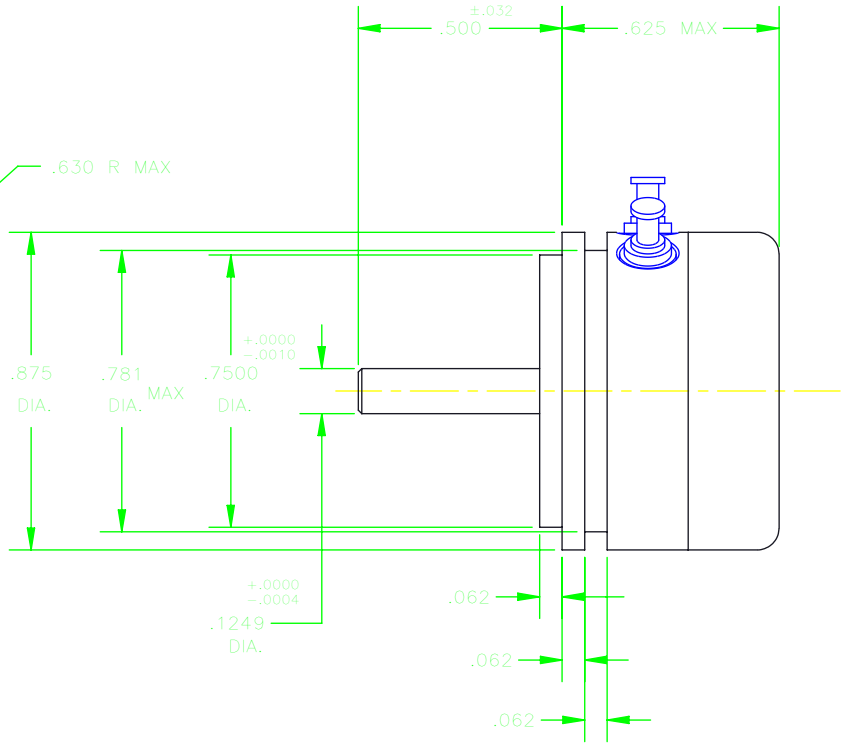

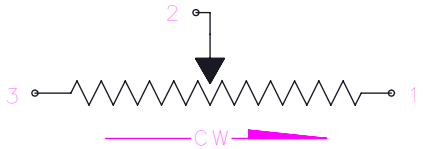

NEXT ASSEMBLY	USED ON	UNLESS OTHERWISE SPECIFIED DIMENSIONS ARE IN INCHES TOLERANCES ARE: FRACTIONS DECIMALS ANGLES ± .xx ±.01 ± 2° .xxx ±.005	CONTRACT No.	JDK CONTROLS INC. GRASSVALLEY CALIFORNIA
	6009-1004	MATERIAL NOTED	APPROVALS / DATE	POTENTIOMETER
APPLICATION		FINISH NOTED	DRAWN D. TREE 10/7/92	SIZE B / CAGE CODE 5W885 / DWG NO. 6009-1004-30
			CHECKED	SCALE: 3X / SHEET 1 OF 1
			ONE INCH	