THIS DRAWING IS UNPUBLISHED. RELEASED FOR PUBLICATION 20
© COPYRIGHT 20 BY - ALL RIGHTS RESERVED.

REVISIONS					
P	LTR	DESCRIPTION	DATE	DWN	APVD
	A	INITIAL RELEASE	05JUL2018	PHM	YP
	B	REVISED AS PER OE010824	01OCT2024	K.S	T.C

PN 2-1437347-3 SHOWN
SCALE 1:1

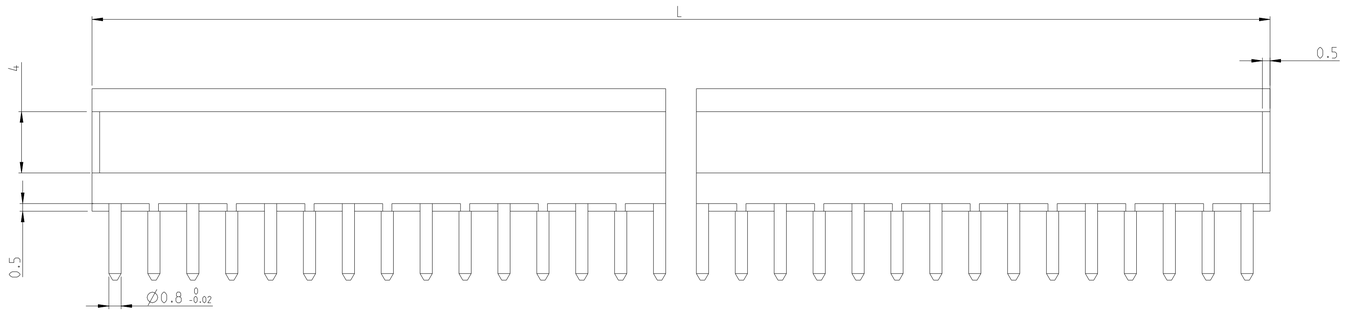

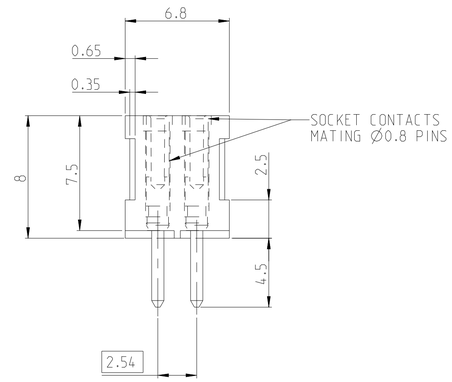

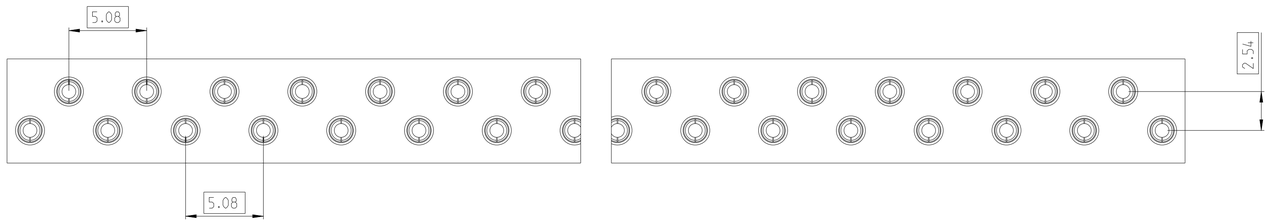

1. MATERIALS:
   HOUSING: GLASS-FILLED PBT, UL 94V0, COLOR BLUE.
   CONTACTS: BERYLLIUM COPPER.

2. SILVER PLATING 2-3µm OVER NICKEL.

3. GOLD PLATING 0.25 µm MIN. OVER NICKEL.

4. OPTIONAL GUIDE HOLES. SEE TABLE.

SCALE 3:1

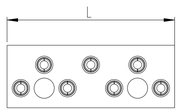

CUTTING PATTERN FOR
ODD NUMBER OF CONTACTS

SCALE 3:1

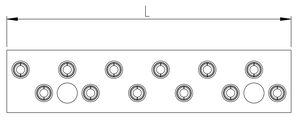

B PATTERN

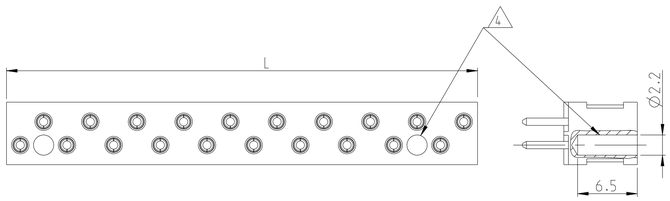

H PATTERN

CUTTING PATTERN FOR
EVEN NUMBER OF CONTACTS

GUIDE HOLES	CUTTING PATTERN	CONTACT FINISH	L±0.4	NUMBER OF CONTACTS	OEC PART NUMBER	PART NUMBER
-	-	2	8.08	3	BRS325SCD3	1-1437347-2
-	-	2	18.24	7	BRS325SCD7	2-1437347-2
2	-	2	18.24	7	BRS325SCD7G	2-1437347-3
2	-	2	23.32	9	BRS325SCD9G	2-1437347-4
2	H	3	25.86	10	BRS325SCD10HGOR	1437347-4
-	-	2	28.4	11	BRS325SCD11	1437347-5
-	B	2	30.94	12	BRS325SCD12B	2091892-1
-	H	2	33.48	13	BRS325SCD13H	2091893-1
2	-	2	33.48	13	BRS325SCD13G	1437347-6
2	-	3	33.48	13	BRS325SCD13GOR	1437347-7
-	-	2	48.72	19	BRS325SCD19	1437347-8
2	-	2	48.72	19	BRS325SCD19G	1437347-9
2	H	3	51.26	20	BRS325SCD20HGOR	6-1437355-9
-	-	2	53.8	21	BRS325SCD21	1-1437347-0
2	-	2	69.04	27	BRS325SCD27G	1-1437347-1
2	-	2	79.2	31	BRS325SCD31G	1-1437347-3
-	-	2	84.28	33	BRS325SCD33	1-1437347-4
2	-	2	94.44	37	BRS325SCD37G	1-1437347-5
-	H	2	109.68	43	BRS325SCD43H	1-1437347-6
2	H	2	112.22	44	BRS325SCD44HG	1-1437347-7
-	H	2	127.46	50	BRS325SCD50H	1-1437347-8
-	B	2	142.7	56	BRS325SCD56B	1-1437347-9
-	H	2	142.7	56	BRS325SCD56H	2-1437347-0
-	-	2	155.4	61	BRS325SCD61	2-1437347-1

THIS DRAWING IS A CONTROLLED DOCUMENT.

DIMENSIONS: mm

TOLERANCES UNLESS OTHERWISE SPECIFIED:
0 PLC ±-
1 PLC ±0.1
2 PLC ±-
3 PLC ±-
4 PLC ±-
ANGLES ±2°

MATERIAL: NOTE 1 -
FINISH: TABLE -

DWN PRAVEEN HM 05JUL2018
CHK Y.PETRONIN 05JUL2018
APVD Y.PETRONIN 05JUL2018
PRODUCT SPEC -
APPLICATION SPEC -
WEIGHT -

TE Connectivity

NAME: HEADERS, FEMALE, RA, OEC BRS325SCD

SIZE A1 | CAGE CODE 00779 | DRAWING NO C-6-1437355-9 | RESTRICTED TO -

CUSTOMER DRAWING | SCALE 5:1 | SHEET 1 OF 1 | REV B

4805 (3/13)