THIS DRAWING IS UNPUBLISHED. RELEASED FOR PUBLICATION -,- .
© COPYRIGHT - By - ALL RIGHTS RESERVED.

LOC	DIST
GP	00

REVISIONS

P	LTR	DESCRIPTION	DATE	DWN	APVD
	C	REVISED PER ECO-12-000090	26JAN2012	CJV	SLB

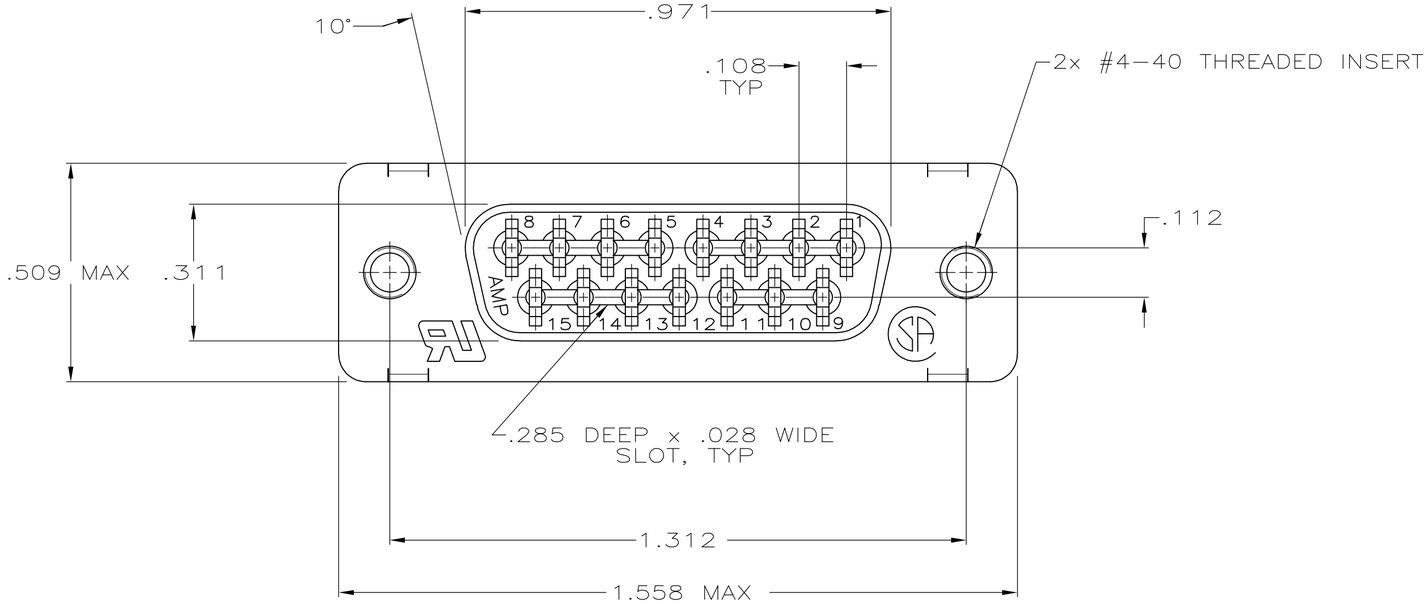

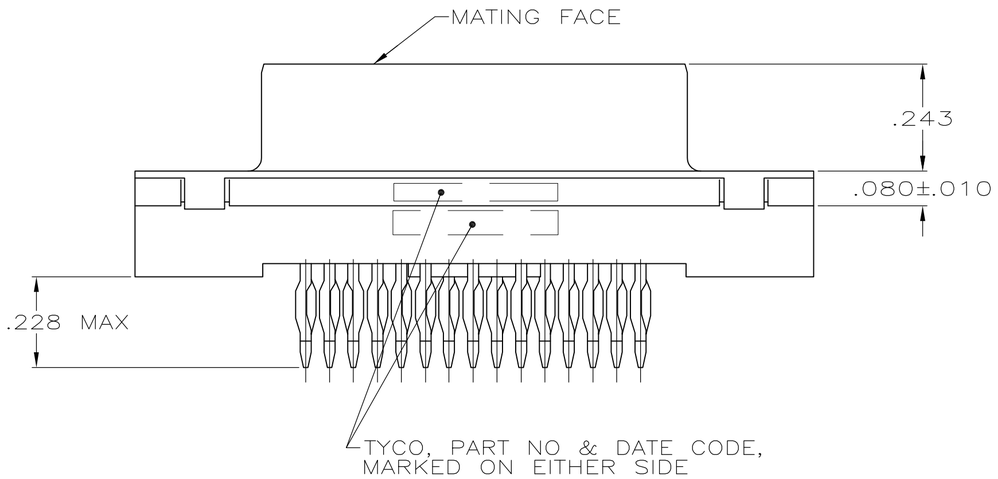

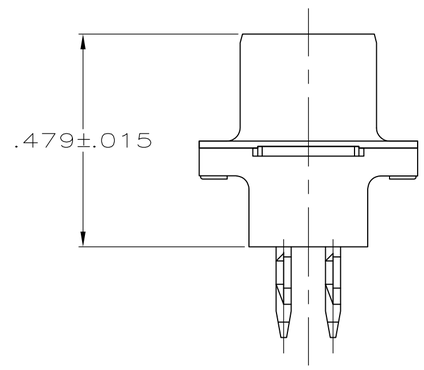

1. FOR USE WITH .093 MINIMUM THICK PRINTED CIRCUIT BOARD. REFER TO APPLICATION SPECIFICATION FOR PRINTED CIRCUIT BOARD LAYOUT DIMENSIONS AND FINISH RECOMMENDATIONS.

2. HOUSING: FLAME RETARDANT 94V-0 RATED THERMOPLASTIC, COLOR BLACK.
SHELL: CARBON STEEL.
CONTACTS: COPPER ALLOY.
INSERTS: BRASS.

3. CONTACTS:
0.76 MICRO METERS [.000030] MINIMUM GOLD IN MATING AREA.
2.54 MICRO METERS [.000100] MINIMUM TIN ON COMPLIANT PIN.
ALL OVER 1.27 MICRO METERS [.000050] MINIMUM NICKEL.
OR
GOLD FLASH OVER PALLADIUM NICKEL.
0.76 MICRO METERS [.000030] MINIMUM TOTAL IN MATING AREA.
2.54 MICRO METERS [.000100] MINIMUM TIN ON COMPLIANT PIN.
ALL OVER 1.27 MICRO METERS [.000050] MINIMUM NICKEL.

5747141

5747141-2
PART NO

COPYRIGHT 2005
TYCO ELECTRONICS CORP
ALL RIGHTS RESERVED

THIS DRAWING IS A CONTROLLED DOCUMENT.
DIMENSIONING AND TOLERANCING PER ASME Y14.5M-2009

DIMENSIONS: INCHES

TOLERANCES UNLESS OTHERWISE SPECIFIED:
0 PLC ± -
1 PLC ± -
2 PLC ± -
3 PLC ± .005
4 PLC ± -
ANGLES ± 2°

MATERIAL 2
FINISH 3

DWN	B. LATTUCA	07OCT05
CHK	S. BOLASH	07OCT05
APVD	M. WALMSLEY	07OCT05
PRODUCT SPEC	108-40014	
APPLICATION SPEC	114-40026 1	
WEIGHT	—	

TE Connectivity

NAME
RCPT ASSY, SIZE 2, 15 POS,
MEDIUM PROFILE, ACTION PIN, METAL SHELL,
AMPLIMITE HDP

SIZE	CAGE CODE	DRAWING NO	RESTRICTED TO
A2	00779	C-5747141	—

CUSTOMER DRAWING | SCALE 4:1 | SHEET 1 OF 1 | REV C

1471-9 (3/11)