THIS DRAWING IS UNPUBLISHED. RELEASED FOR PUBLICATION -,- .
© COPYRIGHT 2006 By - ALL RIGHTS RESERVED.

LOC	DIST
GP	00

REVISIONS

P	LTR	DESCRIPTION	DATE	DWN	APVD
	C	REVISED PER ECO-12-000090	26JAN2012	CJV	SLB

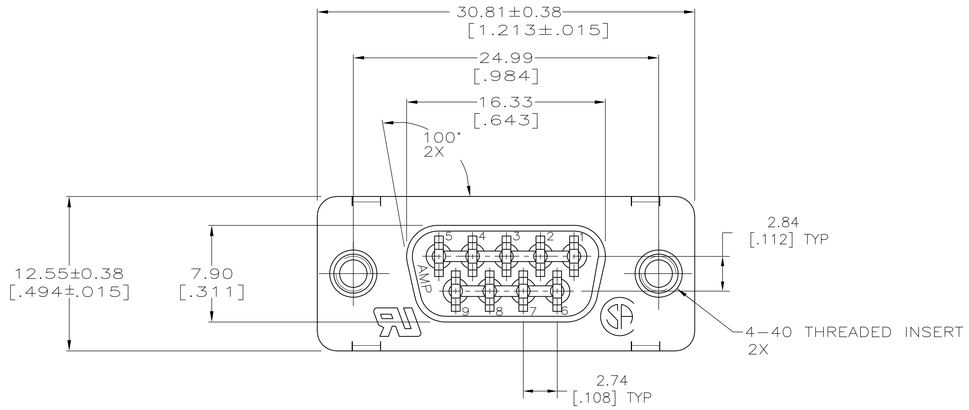

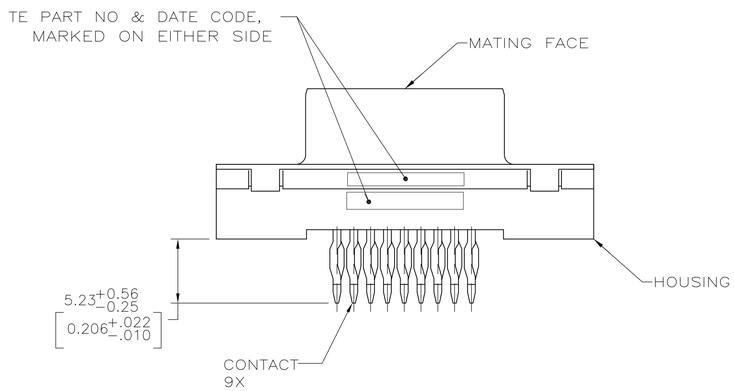

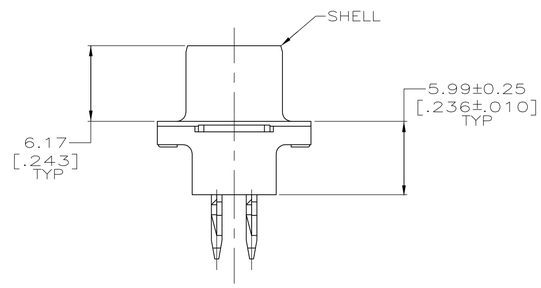

1. FOR USE WITH 2.36 (.093) MINIMUM THICK PRINTED CIRCUIT BOARD. REFER TO APPLICATION SPECIFICATION FOR PRINTED CIRCUIT BOARD LAYOUT DIMENSIONS AND FINISH RECOMMENDATIONS.

2. MATERIAL:
   HOUSING: GLASS-FILLED NYLON OR POLYESTER, UL94V-0 RATED. COLOR: BLACK.
   CONTACTS: COPPER ALLOY.
   SHELL: CARBON STEEL.
   INSERTS: BRASS.

3. SHELLS: 5.08μm[.000200] MIN TIN OVER 2.54μm[.000100] MIN COPPER.

4. DATUMS AND BASIC DIMENSIONS ESTABLISHED BY CUSTOMER.

5. CONTACTS:
   0.76 MICRO METERS [.000030] MINIMUM GOLD IN MATING AREA.
   2.54 MICRO METERS [.000100] MINIMUM TIN ON COMPLIANT PIN.
   ALL OVER 1.27 MICRO METERS [.000050] MINIMUM NICKEL
   OR
   GOLD FLASH OVER PALLADIUM NICKEL,
   0.76 MICRO METERS [.000030] MINIMUM TOTAL IN MATING AREA.
   2.54 MICRO METERS [.000100] MINIMUM TIN ON COMPLIANT PIN.
   ALL OVER 1.27 MICRO METERS [.000050] MINIMUM NICKEL.

5747090-2
PART NUMBER

THIS DRAWING IS A CONTROLLED DOCUMENT.
DIMENSIONING AND TOLERANCING PER ASME Y14.5M-2009

DIMENSIONS: INCHES

TOLERANCES UNLESS OTHERWISE SPECIFIED:
0 PLC ± –
1 PLC ± –
2 PLC ± 0.13 [.005]
3 PLC ± –
4 PLC ± –
ANGLES ± –

MATERIAL 2
FINISH 3 5

DWN G.PETERS/DTI 08MAR06
CHK S.BOLASH 08MAR06
APVD M.WALMSLEY 08MAR06
PRODUCT SPEC 108-40014
APPLICATION SPEC 114-40026 1
WEIGHT –
CUSTOMER DRAWING

TE Connectivity

NAME
RECEPTACLE ASSEMBLY, ACTION-PIN,
9 POSITION, HD-20, AMPLIMITE

SIZE	CAGE CODE	DRAWING NO	RESTRICTED TO
A1	00779	C-5747090	–

SCALE 4:1 SHEET 1 OF 1 REV C

4805 (3/11)