© – TE Connectivity. All Rights Reserved.

REVISIONS					
P	LTR	DESCRIPTION	DATE	DWN	APVD
	B1	REVISED PER ECN-25-311557	17MAR2025	TR	SKN

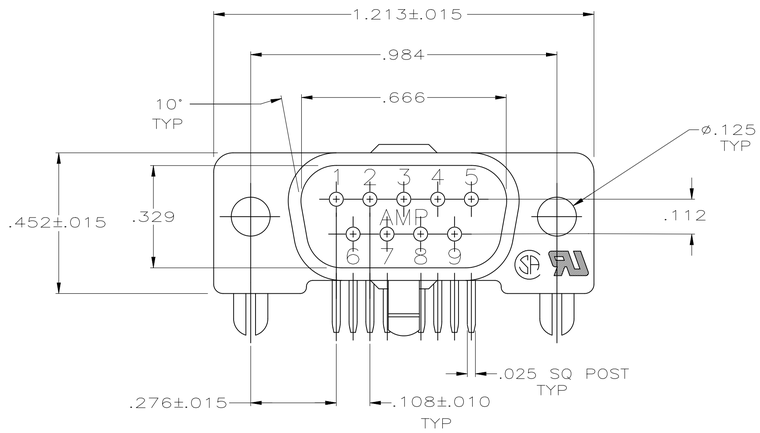

1. HOUSING: FLAME RETARDANT 94V-2 RATED NYLON, COLOR BLACK.
   CONTACTS: BRASS
2. GOLD PLATED FOR A LENGTH OF .150 MIN FROM MATING END, .000030 MIN GOLD IN MATED AREA, .000100 MIN TIN ON OPPOSITE END, BOTH OVER .000050 MIN NICKEL.
   -OR-
   GOLD FLASH OVER .000030 PALLADIUM NICKEL PLATED FOR LENGTH OF .150 MIN FROM MATING END, .000030 MIN PALLADIUM NICKEL IN MATED AREA, .000100 MIN TIN ON OPPOSITE END, BOTH OVER .000050 MIN NICKEL.
3. GOLD PLATED FOR LENGTH OF .150 MIN FROM MATING END, GOLD FLASH IN MATED AREA, .000100 MIN TIN ON OPPOSITE END, BOTH OVER .000050 MIN NICKEL.

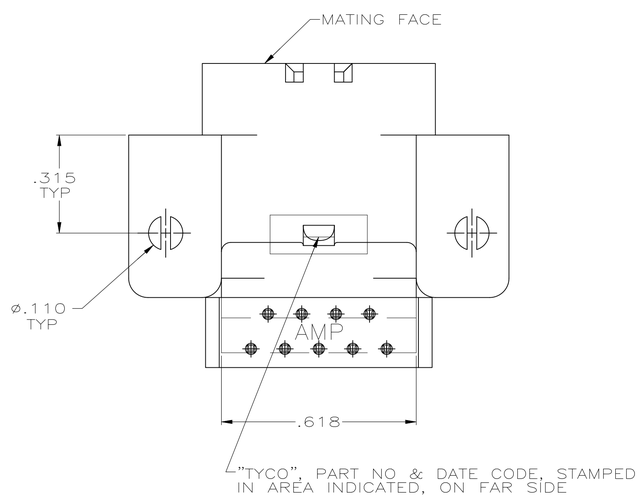

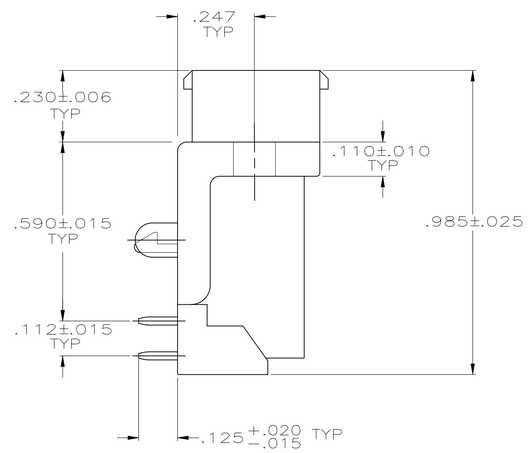

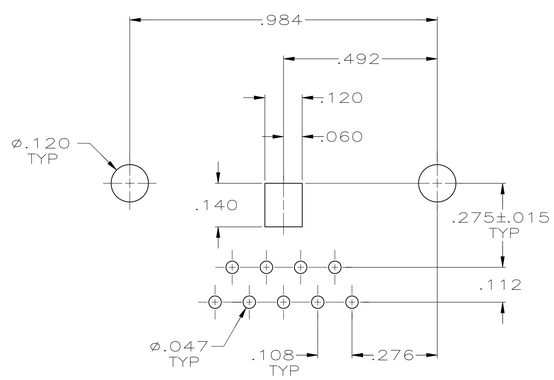

P.C. BOARD MOUNTING DIMENSIONS

(PUNCH FROM CONNECTOR SIDE ONLY)
.062 PC BOARD THICKNESS

	CONTACT FINISH	PART NUMBER
	3	5745001-3
OBSOLETE	2	~~5745001-2~~

THIS DRAWING IS A CONTROLLED DOCUMENT.	DIMENSIONS: INCHES	TOLERANCES UNLESS OTHERWISE SPECIFIED: 0 PLC ± – 1 PLC ± – 2 PLC ± – 3 PLC ± .005 4 PLC ± – ANGLES ± –	DWN S.WAITMAN 19APR05
			CHK J.GERACE 19APR05
			APVD M.WALMSLEY 19APR05
			PRODUCT SPEC 108-40025
			APPLICATION SPEC —
MATERIAL 1		FINISH SEE TABLE	WEIGHT 0.000000
			CUSTOMER DRAWING

TE Connectivity

NAME: PLUG ASSY,1, 9 POS, RIGHT ANGLE, .590 SERIES, .025 SQ POSTS PANEL LOCKS, AMP HDJ

SIZE	CAGE CODE	DRAWING NO	RESTRICTED TO
A1	00779	C-5745001	—

SCALE	SHEET	REV
4:1	1 OF 1	B1

4805 (1/15)