© – TE Connectivity. All Rights Reserved.

REVISIONS					
P	LTR	DESCRIPTION	DATE	DWN	APVD
	E2	REVISED PER ECN-24-294447	03MAY2024	TR	RCG

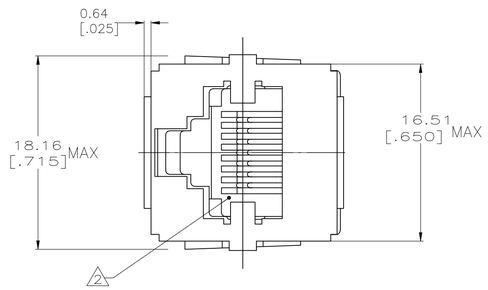

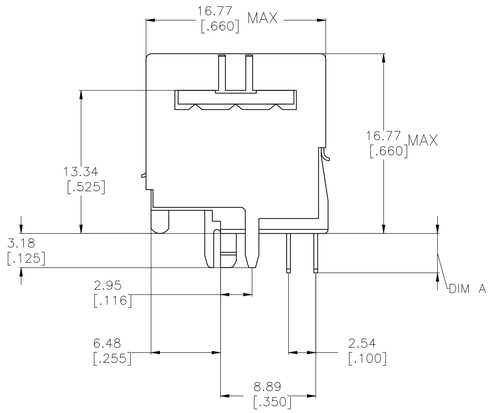

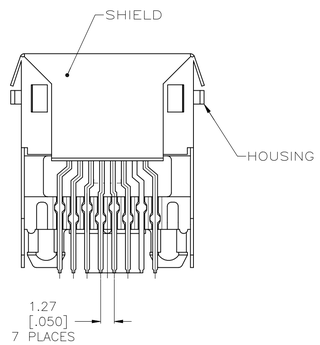

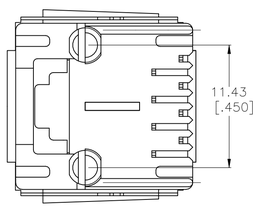

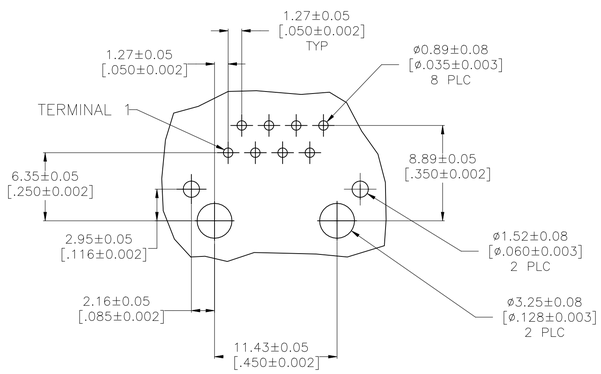

RECOMMENDED PRINTED CIRCUIT BOARD LAYOUT
COMPONENT SIDE SHOWN

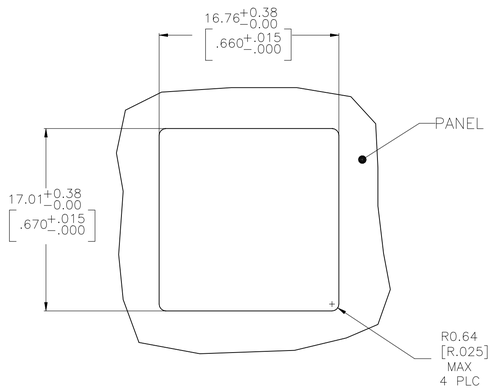

RECOMMENDED PANEL CUTOUT

1. MATERIAL:
HOUSING – POLYESTER MOLDING COMPOUND, COLOR: BLACK
TERMINALS – 0.35[.0138] THICK PHOS BRONZE PLATED WITH 1.27µm[.000050] MIN THICK GOLD IN LOCALIZED AREA AND 3.81µm[.000150] MIN THICK MATTE TIN IN SOLDER AREA OVER 1.27µm[.000050] MIN THICK NICKEL UNDERPLATE
SHIELD – COPPER ZINC ALLOY PLATED WITH 3.0µm [.000120] MIN THICK REFLOWED TIN.

2. CAVITY CONFORMS TO FCC RULES AND REGULATIONS PART 68 AND REA BULLETIN 345-81, PE-76 SPECIFICATION FOR MODULAR TELEPHONE HARDWARE.

3. MATERIAL:
HOUSING – HIGH TEMP THEMOPLASTIC-LCP, COLOR: BLACK
TERMINALS – 0.35[.0138] THICK PHOS BRONZE PLATED WITH 1.27µm[.000050] MIN THICK GOLD IN LOCALIZED AREA AND 3.81µm[.000150] MIN THICK MATTE TIN IN SOLDER AREA OVER 1.27µm[.000050] MIN THICK NICKEL UNDERPLATE
SHIELD – COPPER ZINC ALLOY PLATED WITH 3.0µm [.000120] MIN THICK REFLOWED TIN.

4. RECOMMENDED DIAMETER OF POSITION HOLE ON PCB FOR 5557969-3, 5557969-4 IS 3.175±0.08MM

5. SAME AS 5557969-3 BUT RESTRICTED TO CUSTOMNER

MATERIAL	DIM A	PART NUMBER
5 4 3	2.79-3.56 [.125±.015]	5557969-4
4 3	2.79-3.56 [.125±.015]	5557969-3
1	2.79-3.30 [.120±.010]	5557969-2
1	2.79-3.56 [.125±.015]	5557969-1

THIS DRAWING IS A CONTROLLED DOCUMENT.

DIMENSIONS: mm [INCHES]

TOLERANCES UNLESS OTHERWISE SPECIFIED:
0 PLC ± –
1 PLC ± –
2 PLC ± 0.3[.011]
3 PLC ± –
4 PLC ± –
ANGLES ± –

MATERIAL: SEE NOTE 1
FINISH: SEE NOTE 1

DWN 06JUN2005 A. FERNANDEZ-DOCK5
CHK 06JUN2005 J. WESTMAN
APVD 06JUN2005 S. FLICKINGER
PRODUCT SPEC 108-1163
APPLICATION SPEC 114-2048
WEIGHT 0.000000

TE Connectivity

NAME: MODULAR JACK ASSEMBLY, TOP ENTRY,8 POSITION, FLANGELESS,SHIELDED,WITH PANEL

SIZE	CAGE CODE	DRAWING NO	RESTRICTED TO
A1	00779	C-5557969	–

CUSTOMER DRAWING | SCALE 4:1 | SHEET 1 OF 1 | REV E2

4805 (1/15)