© – TE Connectivity. All Rights Reserved.

REVISIONS					
P	LTR	DESCRIPTION	DATE	DWN	APVD
	N	REVISED PER ECR-24-207629	15MAY2024	SA	DSC

AMP
WIRE RANGE

26-22 AWG
STRANDED

1 WIRE INSULATION DIA 1.27 [.050] TO 2.08 [.082].

2 NOTE DELETED

3 NOTE DELETED

4 FINISH: BODY AND SLEEVE:
TIN/LEAD (93-7) PLATE PER ASTM B545.
(3% MIN LEAD CONTENT)

5 MATERIAL: BODY AND SLEEVE,
COPPER PER ASTM B152
INSULATION: PVF²
COLOR- NATURAL

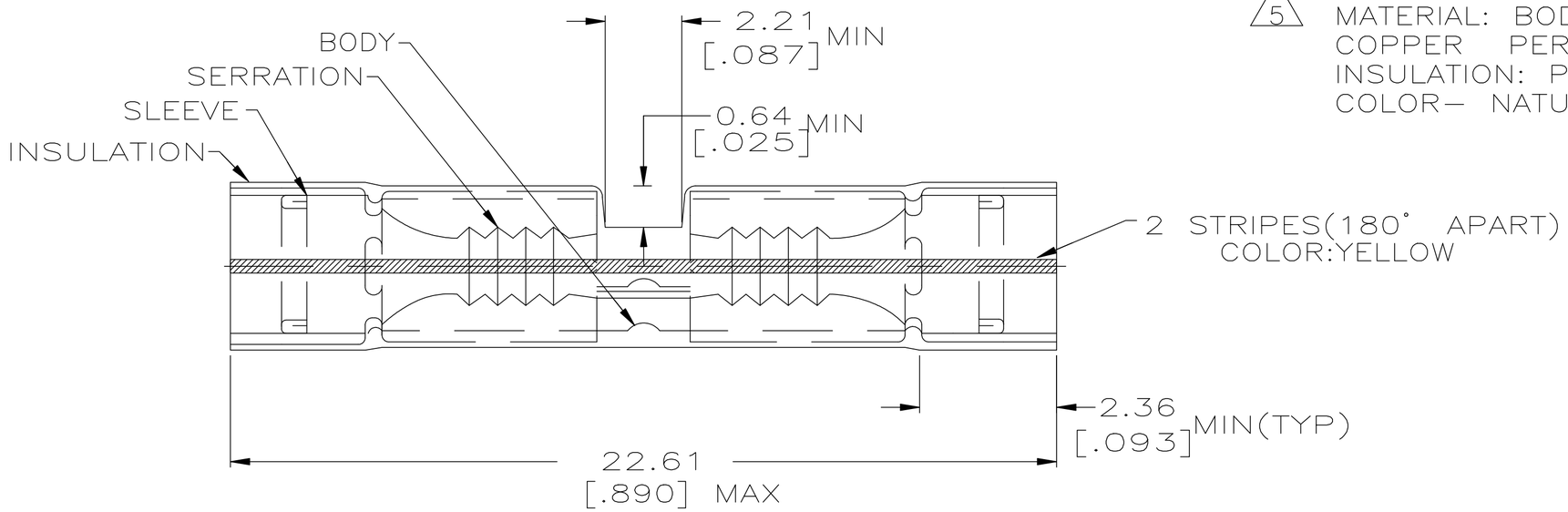

26-24 M7928/6-1 CLASS 1	1000	LOOSE PIECE	53546-1
MILITARY P/N & CLASS PER MIL-T-7928	QTY	PACKAGE TYPE	PART NO

AMP INCORPORATED
CUSTOMER SERVICE SYSTEMS

FOR ADDITIONAL PRODUCT INFORMATION OR COPIES OF DRAWINGS AND TECHNICAL DOCUMENTS	PRODUCT INFORMATION CENTER 1-800-522-6752
FOR APPLICATION TOOLING INFORMATION	TOOLING ASSISTANCE CENTER 1-800-722-1111
FOR ORDER ENTRY	1-800-526-5142

THIS DRAWING IS A CONTROLLED DOCUMENT FOR AMP INCORPORATED. IT IS SUBJECT TO CHANGE AND THE CONTROLLING ENGINEERING ORGANIZATION SHOULD BE CONTACTED FOR THE LATEST REVISION.

MAX RECOMMENDED OPERATING TEMPERATURE: 150°C

VOLTAGE RATING: –

CIRCULAR MIL AREA: 0.10-0.41mm² [202-810] STRANDED

THIS DRAWING IS A CONTROLLED DOCUMENT.

DIMENSIONS: MM [INCHES]

TOLERANCES UNLESS OTHERWISE SPECIFIED:

0 PLC	± –
1 PLC	± –
2 PLC	± 0.20[.008]
3 PLC	± –
4 PLC	± –
ANGLES	± –

MATERIAL 5

FINISH 4

DWN	S.S. GOULDEN	9-28-93
CHK	R. HERSEY	9-28-93
APVD	M ELLIS	9-28-93

PRODUCT SPEC 108-11023

APPLICATION SPEC –

WEIGHT –

TE Connectivity

NAME: SPLICE, BUTT, PVF², P.I.D.G.
WIRE SIZE: 26-22 AWG
, P.I.D.G.,

SIZE	CAGE CODE	DRAWING NO	RESTRICTED TO
A3	00779	C-53546	–

CUSTOMER DRAWING | SCALE 1:1 | SHEET 1 OF 1 | REV N

1470-19 (1/15)