© – TE Connectivity. All Rights Reserved.

REVISIONS					
P	LTR	DESCRIPTION	DATE	DWN	APVD
	T	REVISED PER ECN-23-195747	27JAN2023	RK	JO

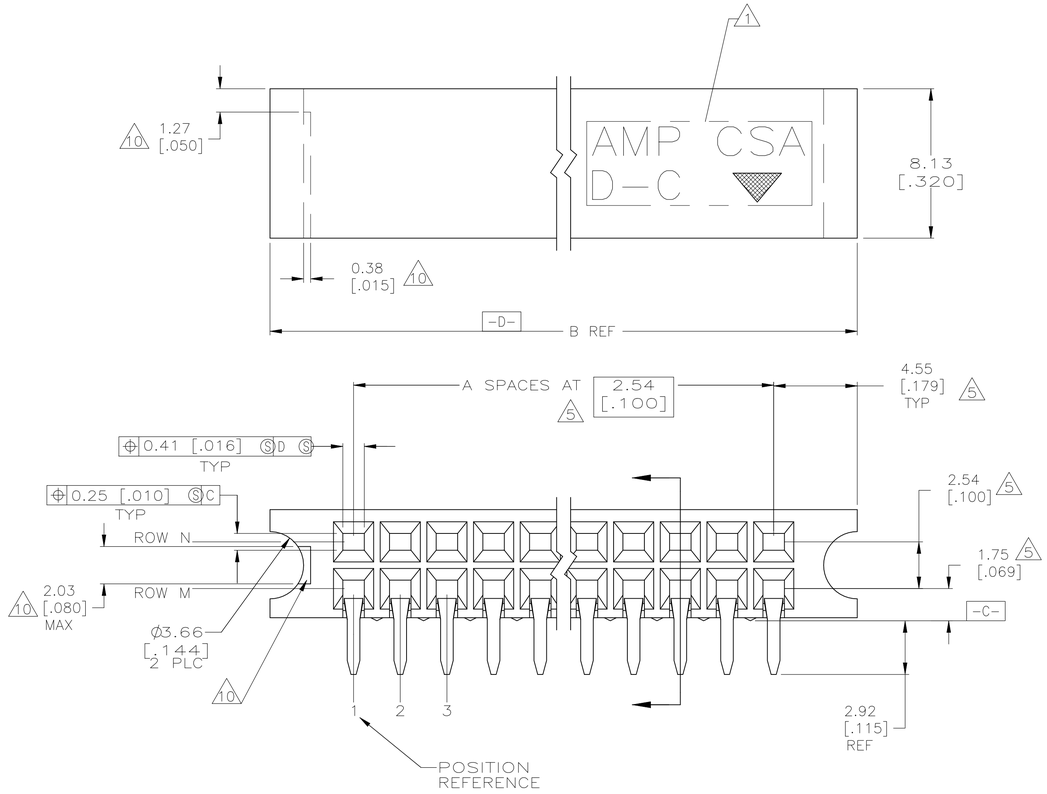

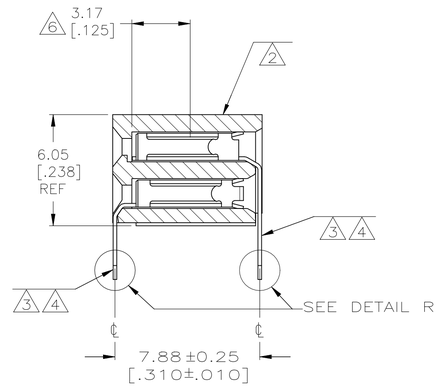

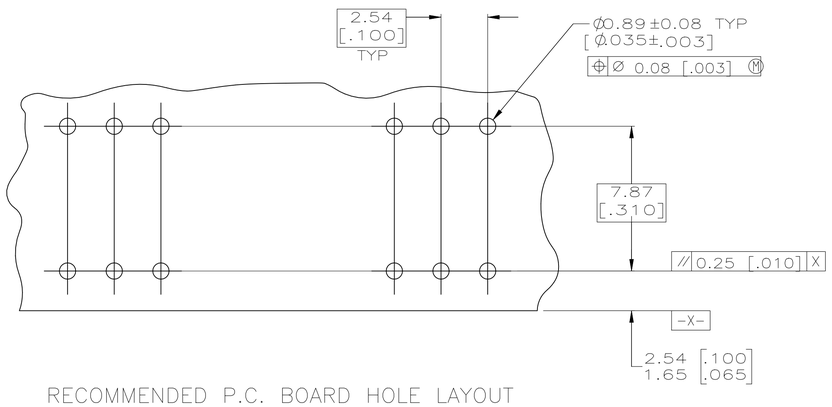

RECOMMENDED P.C. BOARD HOLE LAYOUT

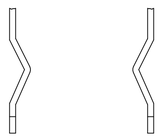

DETAIL R
BOARD RETENTION FEATURE
SCALE 10:1

1. "AMP", "CSA", "▼", AND "DATE CODE" WITH .062 ±.015 HIGH CHARACTERS WHERE SIZE PERMITS.
2. HOUSING: LCP MATERIAL
3. CONTACT: PHOSPHOR BRONZE.
4. CONTACT FINISH: DUPLEX PLATED 0.00038 [.000015] GOLD IN CONTACT AREA, 0.00127–0.00254 [.000050–.000100] BRIGHT TIN–LEAD ON SOLDER TAILS, ALL OVER 0.00127 [.000050] NICKEL.
5. THESE DIMENSIONS PERTAIN TO CAVITY ℄'S ONLY, NOT TO CONTACT LOCATIONS.
6. POINT OF MEASUREMENT FOR PLATING THICKNESS (INSIDE CONTACT BEAMS).
7. CSA LOGO INK STAMPED WHITE ON HOUSING.
8. CONTACT FINISH: DUPLEX PLATED 0.00038 [.000015] GOLD IN CONTACT AREA, 0.00127–0.00254 [.000050–.000100] MATTE TIN ON SOLDER TAILS, ALL OVER 0.00127 [.000050] NICKEL.
9. ROHS 2002/95/EC COMPLIANT.
10. RECESSED AREA AROUND MOLD GATE IS OPTIONAL. THIS FEATURE IS ALLOWABLE ON EITHER SIDE OF HOUSING OR MAY NOT BE PRESENT AT ALL.
11. OBSOLETE PARTS: OBSOLETE CIS STREAMLINING PER D.RENAUD/D.SINISI

	FINISH	ROW M	ROW N	B	A	NO OF POSN	PART NUMBER
		POSITION WITH BOARD RETENTION					
11 OBSOLETE	8	1, 2, 7, 8	1, 2, 7, 8	26.87 [1.058]	7	16	9 6-534975-5
		1, 2, 39, 40	1, 2, 39, 40	108.15 [4.258]	39	80	9 ~~6-534975-4~~
		1, 2, 34, 35	1, 2, 34, 35	95.45 [3.758]	34	70	9 6-534975-3
11 OBSOLETE		1, 2, 29, 30	1, 2, 29, 30	82.75 [3.258]	29	60	9 ~~6-534975-2~~
		1, 2, 24, 25	1, 2, 24, 25	70.05 [2.758]	24	50	9 6-534975-1
11 OBSOLETE		1, 2, 19, 20	1, 2, 19, 20	57.35 [2.258]	19	40	9 ~~6-534975-0~~
11 OBSOLETE		1, 2, 17, 18	1, 2, 17, 18	52.27 [2.058]	17	36	9 ~~5-534975-9~~
		1, 2, 14, 15	1, 2, 14, 15	44.65 [1.758]	14	30	9 5-534975-8
		1, 2, 11, 12	1, 2, 11, 12	37.03 [1.458]	11	24	9 5-534975-7
11 OBSOLETE		1, 2, 9, 10	1, 2, 9, 10	31.95 [1.258]	9	20	9 ~~5-534975-6~~
		1, 2, 5, 6	1, 2, 5, 6	21.79 [.858]	5	12	9 5-534975-5
11 OBSOLETE		1, 2, 50, 51, 99, 100	1, 2, 50, 51, 99, 100	260.55 [10.258]	99	200	9 ~~5-534975-4~~
OBSOLETE		1, 2, 40, 41, 79, 80	1, 2, 40, 41, 79, 80	209.75 [8.258]	79	160	9 ~~5-534975-3~~
		1, 2, 30, 31, 59, 60	1, 2, 30, 31, 59, 60	158.95 [6.258]	59	120	9 5-534975-2
11 OBSOLETE		1, 2, 24, 25, 49, 50	1, 2, 24, 25, 49, 50	133.55 [5.258]	49	100	9 ~~5-534975-1~~
	4	1, 2, 7, 8	1, 2, 7, 8	26.87 [1.058]	7	16	1-534975-5
11 OBSOLETE		1, 2, 39, 40	1, 2, 39, 40	108.15 [4.258]	39	80	~~1-534975-4~~
		1, 2, 34, 35	1, 2, 34, 35	95.45 [3.758]	34	70	1-534975-3
11 OBSOLETE		1, 2, 29, 30	1, 2, 29, 30	82.75 [3.258]	29	60	~~1-534975-2~~
		1, 2, 24, 25	1, 2, 24, 25	70.05 [2.758]	24	50	1-534975-1
		1, 2, 19, 20	1, 2, 19, 20	57.35 [2.258]	19	40	1-534975-0
11 OBSOLETE		1, 2, 17, 18	1, 2, 17, 18	52.27 [2.058]	17	36	~~534975-9~~
11 SUPERSEDED BY 5-534975-8		1, 2, 14, 15	1, 2, 14, 15	44.65 [1.758]	14	30	~~534975-8~~
		1, 2, 11, 12	1, 2, 11, 12	37.03 [1.458]	11	24	534975-7
11 OBSOLETE		1, 2, 9, 10	1, 2, 9, 10	31.95 [1.258]	9	20	~~534975-6~~
		1, 2, 5, 6	1, 2, 5, 6	21.79 [.858]	5	12	534975-5
11 OBSOLETE		1, 2, 50, 51, 99, 100	1, 2, 50, 51, 99, 100	260.55 [10.258]	99	200	~~534975-4~~
OBSOLETE		1, 2, 40, 41, 79, 80	1, 2, 40, 41, 79, 80	209.75 [8.258]	79	160	534975-3
11 SUPERSEDED BY 5-534975-2		1, 2, 30, 31, 59, 60	1, 2, 30, 31, 59, 60	158.95 [6.258]	59	120	~~534975-2~~
11 OBSOLETE		1, 2, 24, 25, 49, 50	1, 2, 24, 25, 49, 50	133.55 [5.258]	49	100	~~534975-1~~

THIS DRAWING IS A CONTROLLED DOCUMENT.

DIMENSIONS: mm [INCHES]

TOLERANCES UNLESS OTHERWISE SPECIFIED:
0 PLC ± –
1 PLC ± –
2 PLC ± 0.13 [.005]
3 PLC ± –
4 PLC ± –
ANGLES ± –

MATERIAL 2 3
FINISH SEE TABLE

DWN 3/7/91 K.L.CLOUSER/UTA
CHK 03/91 DOUG SARVER
APVD –
PRODUCT SPEC –
APPLICATION SPEC –
WEIGHT –

TE Connectivity

NAME RECEPTACLE ASSY, MOD II, DBL ROW, 2.54 X 2.54 [.100 X .100] CL, –

SIZE	CAGE CODE	DRAWING NO	RESTRICTED TO
A1	00779	C-534975	–

CUSTOMER DRAWING | SCALE 6:1 | SHEET 1 OF 1 | REV T

4805 (1/15)