© – TE Connectivity. All Rights Reserved.

REVISIONS					
P	LTR	DESCRIPTION	DATE	DWN	APVD
	S	REVISED PER ECR-24-207629	15MAY2024	SA	DSC

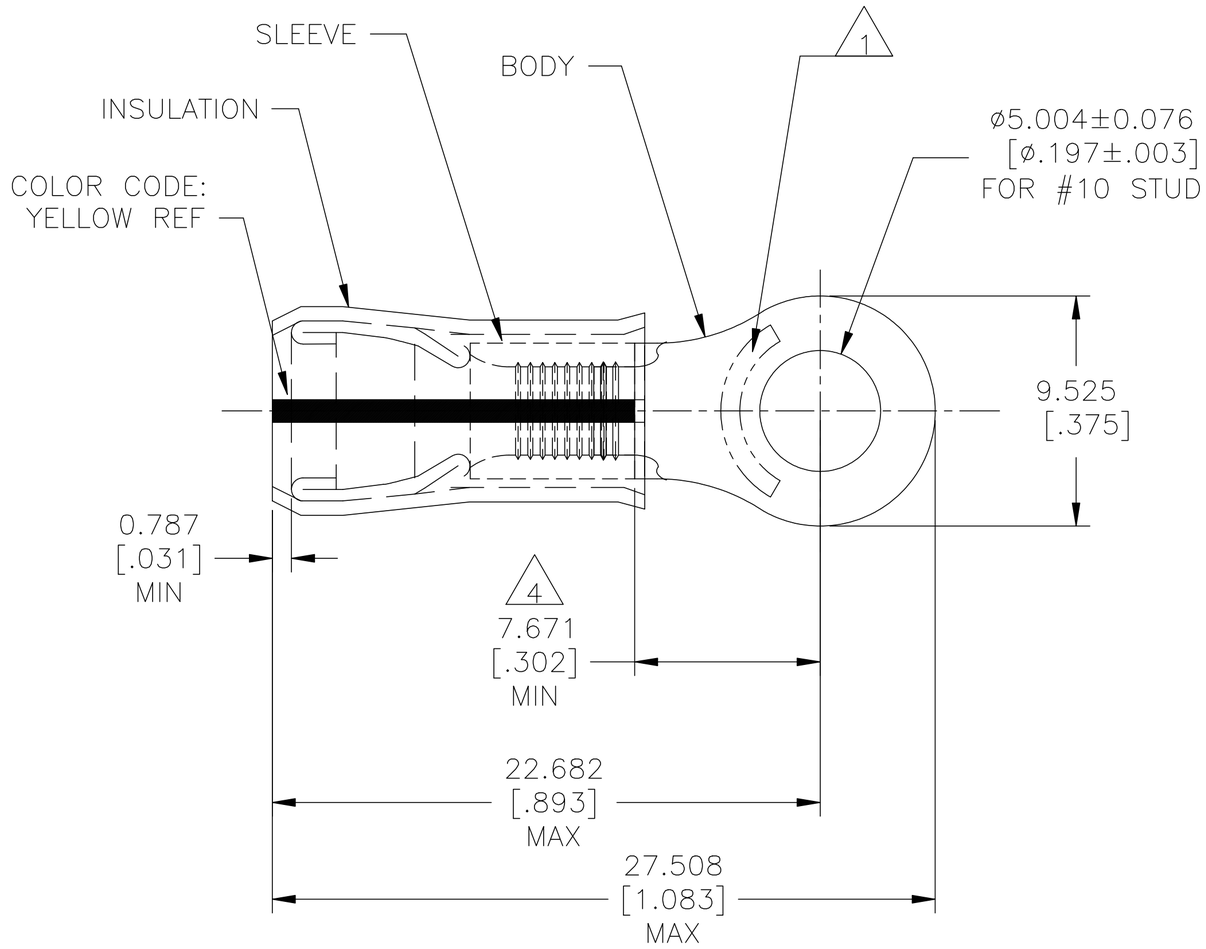

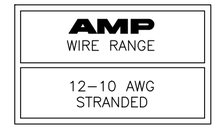

1. STAMP AMP 12-10* APPROX AS SHOWN.
2. WIRE INSULATION : ø3.810-5.842[ø.150-.230]
3. BODY MATERIAL THK: 0.991±0.051[.039±.002]
4. APPLIES FROM EDGE OF METAL WIRE BARREL TO CENTER OF STUD HOLE.
5. MEETS M7928/4-112, CLASS 1
   MEETS M7928/13-112, CLASS 1
6. NOTE DELETED.
7. MATERIAL:
   BODY & SLEEVE: COPPER PER ASTM B152
   INSULATION: PVF^2
8. FINISH:
   BODY & SLEEVE: TIN-LEAD (93-7) PLATE PER ASTM B545 (3% MIN LEAD CONTENT)
   INSULATION: COLOR-NATURAL

QTY	PACKAGE TYPE	PART NO
500	LOOSE PIECE	5 53425-1

AMP INCORPORATED
CUSTOMER SERVICE SYSTEMS

FOR ADDITIONAL PRODUCT INFORMATION OR COPIES OF DRAWINGS AND TECHNICAL DOCUMENTS	PRODUCT INFORMATION CENTER 1-800-522-6752
FOR APPLICATION TOOLING INFORMATION	TOOLING ASSISTANCE CENTER 1-800-722-1111
FOR ORDER ENTRY	1-800-526-5142

THIS DRAWING IS A CONTROLLED DOCUMENT FOR AMP INCORPORATED. IT IS SUBJECT TO CHANGE AND THE CONTROLLING ENGINEERING ORGANIZATION SHOULD BE CONTACTED FOR THE LATEST REVISION.

MAX RECOMMENDED OPERATING TEMPERATURE: 150°C [302°F] MAX

VOLTAGE RATING: –

CIRCULAR MIL AREA: 2.62-6.64mm^2[5,180-13,100] STRANDED

THIS DRAWING IS A CONTROLLED DOCUMENT.

DIMENSIONS: mm [INCHES]

TOLERANCES UNLESS OTHERWISE SPECIFIED:

0 PLC	± –
1 PLC	± –
2 PLC	± –
3 PLC	± 0.127[.005]
4 PLC	± –
ANGLES	± –

MATERIAL 7

FINISH 8

DWN	JR RUTH	16OCT07
CHK	T MICHIELUTTI	16OCT07
APVD	T MICHIELUTTI	16OCT07
PRODUCT SPEC	—	
APPLICATION SPEC	114-2157	
WEIGHT	—	

TE Connectivity

NAME: TERMINAL, RING TONGUE, PVF2 , P.I.D.G. WIRE SIZE: 12-10 AWG

SIZE	CAGE CODE	DRAWING NO	RESTRICTED TO
A3	00779	C-53425	—

CUSTOMER DRAWING | SCALE 4:1 | SHEET 1 OF 1 | REV S

1470-19 (1/15)