© – TE Connectivity. All Rights Reserved.

REVISIONS					
P	LTR	DESCRIPTION	DATE	DWN	APVD
	T	REVISED PER ECR-24-207629	15MAY2024	SA	DSC

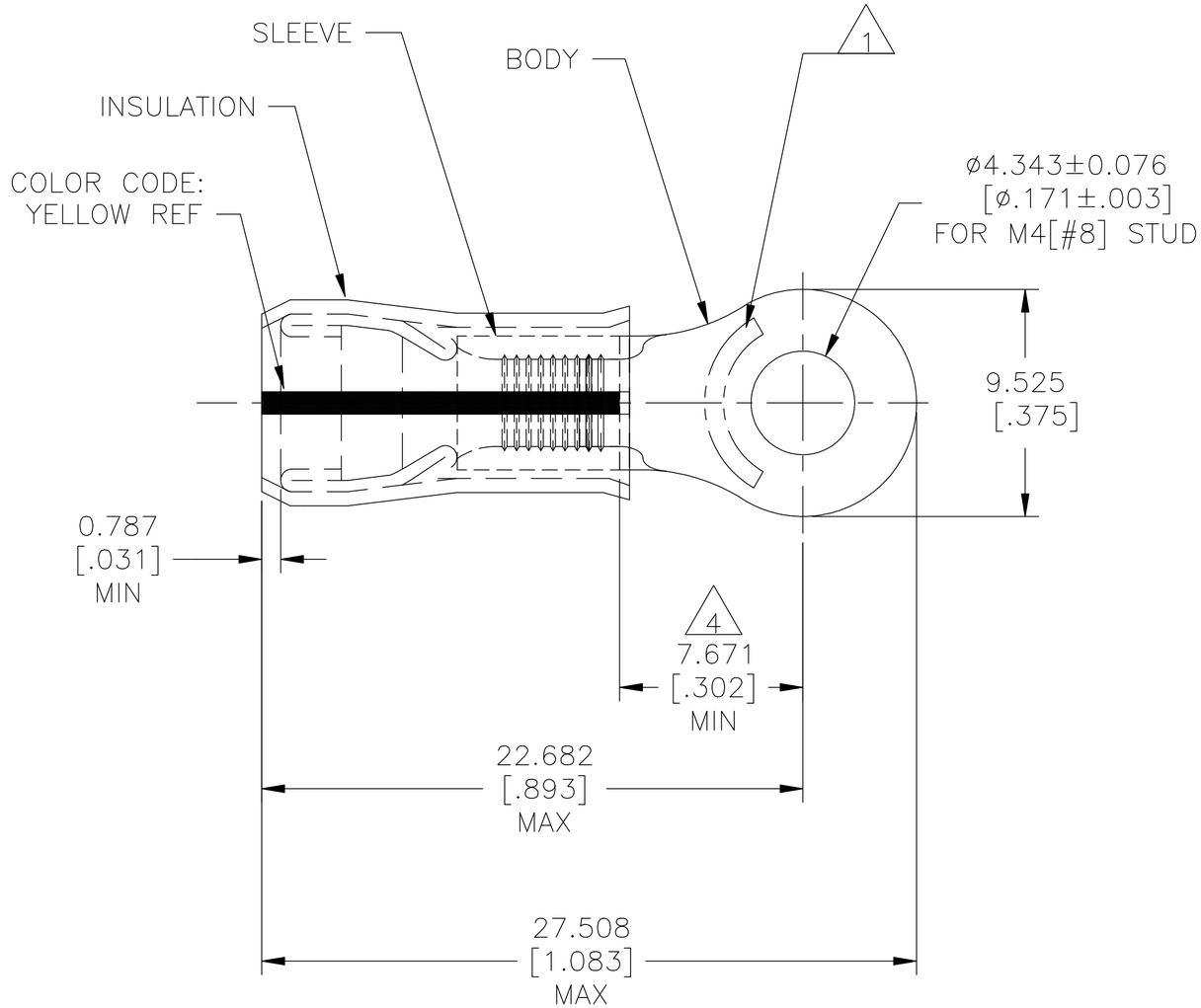

AMP
WIRE RANGE
12–10 AWG
STRANDED

1. STAMP AMP 12–10* APPROX AS SHOWN
2. WIRE INSULATION DIA: "A" (SEE TABLE)
3. BODY MATERIAL THK: 0.991±0.051[.039±.002]
4. APPLIES FROM EDGE OF METAL WIRE BARREL TO CENTER OF STUD HOLE
5. MEETS M7928/4–156, CLASS 1
   MEETS M7928/13–156, CLASS 1
6. NOTE DELETED
7. MATERIAL:
   BODY & SLEEVE: COPPER PER ASTM B152
   INSULATION: PVF2
8. FINISH:
   BODY & SLEEVE: TIN–LEAD (93–7) PLATE PER ASTM B545 (3% MIN LEAD CONTENT)
   INSULATION: COLOR – NATURAL

QTY	PACKAGE TYPE	"A"	PART NO
500	LOOSE PIECE	3.810–5.842 [.150–.230]	5 53424–1

AMP INCORPORATED
CUSTOMER SERVICE SYSTEMS

FOR ADDITIONAL PRODUCT INFORMATION OR COPIES OF DRAWINGS AND TECHNICAL DOCUMENTS	PRODUCT INFORMATION CENTER 1–800–522–6752
FOR APPLICATION TOOLING INFORMATION	TOOLING ASSISTANCE CENTER 1–800–722–1111
FOR ORDER ENTRY	1–800–526–5142

THIS DRAWING IS A CONTROLLED DOCUMENT FOR AMP INCORPORATED. IT IS SUBJECT TO CHANGE AND THE CONTROLLING ENGINEERING ORGANIZATION SHOULD BE CONTACTED FOR THE LATEST REVISION.

MAX RECOMMENDED OPERATING TEMPERATURE: 150°C [302°F] MAX

VOLTAGE RATING: –

CIRCULAR MIL AREA: 2.62–6.64mm² [5,180–13,100] STRANDED

THIS DRAWING IS A CONTROLLED DOCUMENT.

DIMENSIONS: mm [INCHES]

TOLERANCES UNLESS OTHERWISE SPECIFIED:

0 PLC	± –
1 PLC	± –
2 PLC	± –
3 PLC	± 0.127[.005]
4 PLC	± –
ANGLES	± –

MATERIAL 7

FINISH 8

DWN	JR RUTH	16OCT07
CHK	T MICHIELUTTI	16OCT07
APVD	T MICHIELUTTI	16OCT07
PRODUCT SPEC	—	
APPLICATION SPEC	—	
WEIGHT	—	

TE Connectivity

NAME: TERMINAL, RING TONGUE, PVF2 , P.I.D.G. WIRE SIZE: 12–10 AWG

SIZE	CAGE CODE	DRAWING NO	RESTRICTED TO
A3	00779	C–53424	—

CUSTOMER DRAWING | SCALE 4:1 | SHEET 1 OF 1 | REV T

1470–19 (1/15)