© – TE Connectivity. All Rights Reserved.

REVISIONS					
P	LTR	DESCRIPTION	DATE	DWN	APVD
	E	REVISED PER ECR-24-207629	15MAY2024	SA	DSC

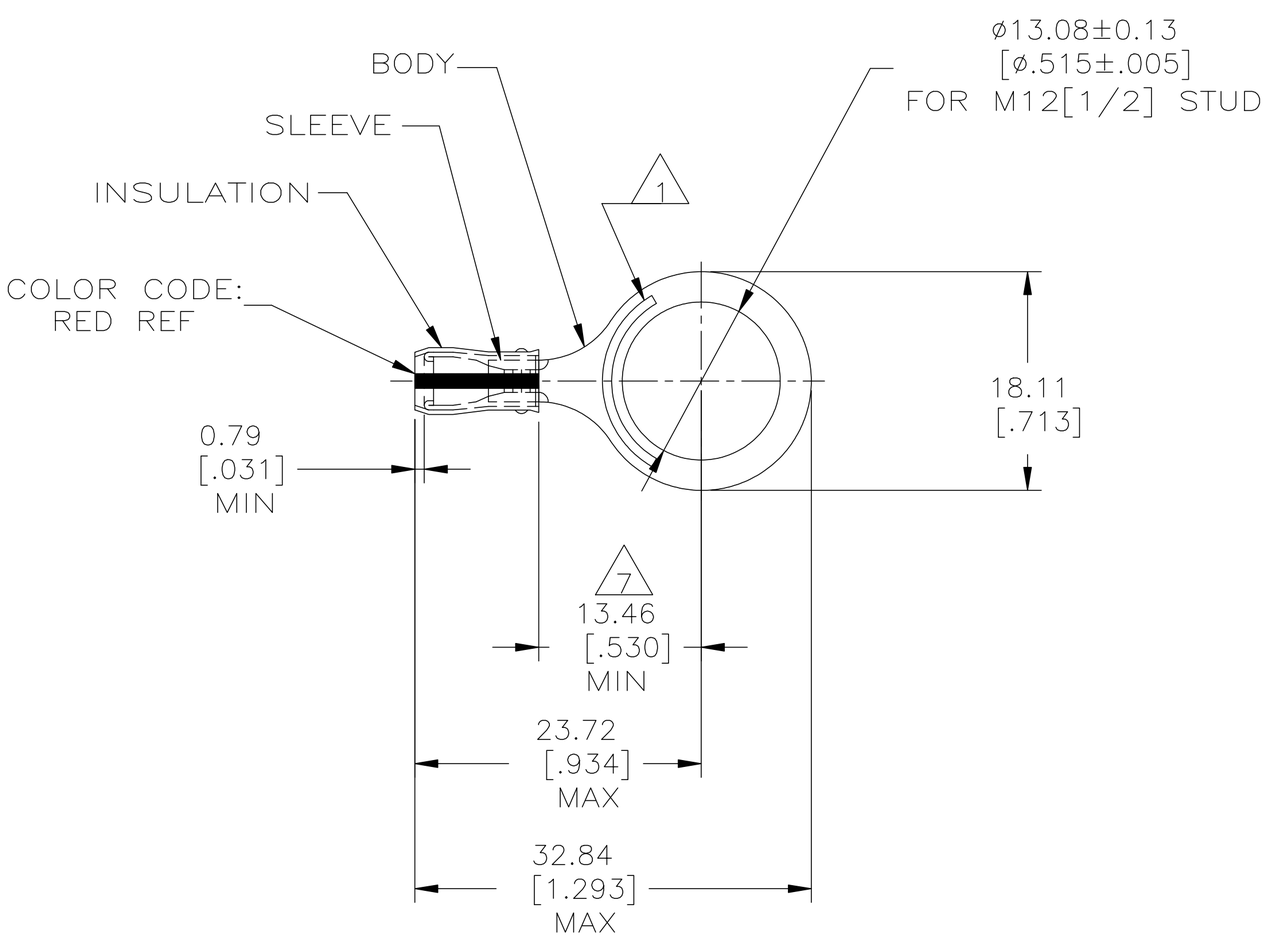

1. STAMP AMP 22-18* APPROX AS SHOWN 22-16 TERMINALS ARE STAMPED 22-18 IN ACCORDANCE WITH MILITARY SPEC SAE AS7928 COMMERCIAL WIRE RANGE IS 22-16.
2. WIRE INSULATION DIA: 2.03-3.18 [.080-.125.]
3. TONGUE MATERIAL THK: 0.79±0.05 [.031±.002]
4. BODY & SLEEVE: TIN/LEAD (93-7) PLATE PER ASTM B545. (3% MIN LEAD CONTENT)
5. BODY & SLEEVE- CU PER ASTM B152 INSULATION - PVF2, COLOR - NATURAL
6. MEETS M7928/4-151, CLASS 1 MEETS M7928/13-151, CLASS 1
7. DIMENSION APPLIES FROM EDGE OF METAL WIRE BARREL TO CENTER OF STUD HOLE.

QTY	PACKAGE TYPE	PART NO.
1000	LOOSE PIECE	6 53413-1

AMP INCORPORATED
CUSTOMER SERVICE SYSTEMS

FOR ADDITIONAL PRODUCT INFORMATION OR COPIES OF DRAWINGS AND TECHNICAL DOCUMENTS	PRODUCT INFORMATION CENTER 1-800-522-6752
FOR APPLICATION TOOLING INFORMATION	TOOLING ASSISTANCE CENTER 1-800-722-1111
FOR ORDER ENTRY	1-800-526-5142

THIS DRAWING IS A CONTROLLED DOCUMENT FOR AMP INCORPORATED. IT IS SUBJECT TO CHANGE AND THE CONTROLLING ENGINEERING ORGANIZATION SHOULD BE CONTACTED FOR THE LATEST REVISION.

MAX RECOMMENDED OPERATING TEMPERATURE: 150°C [302°F] MAX

VOLTAGE RATING: N/A

CIRCULAR MIL AREA: 0.26-1.65mm² [509-3260] STRANDED

THIS DRAWING IS A CONTROLLED DOCUMENT.

DIMENSIONS: mm [INCHES]

TOLERANCES UNLESS OTHERWISE SPECIFIED:

0 PLC	± -
1 PLC	± -
2 PLC	± 0.20[.008]
3 PLC	± -
4 PLC	± -
ANGLES	± -

MATERIAL 5

FINISH 4

DWN	DK SCHRUM	06/16/93
CHK	RE HERSEY	7/6/93
APVD	M ELLIS	7/6/93
PRODUCT SPEC	—	
APPLICATION SPEC	NOT AVAILABLE	
WEIGHT	—	

TE Connectivity

NAME: TERMINAL, RING TONGUE, PVF2 , P.I.D.G. WIRE SIZE: 22-16 AWG

SIZE	CAGE CODE	DRAWING NO	RESTRICTED TO
A3	00779	C-53413	—

CUSTOMER DRAWING | SCALE 2:1 | SHEET 1 OF 1 | REV E

1470-19 (1/15)