NUMBER 520314

METRIC

(3rd ANGLE PROJECTION)

DIMENSIONS IN MM [INCHES]. DO NOT SCALE PRINT

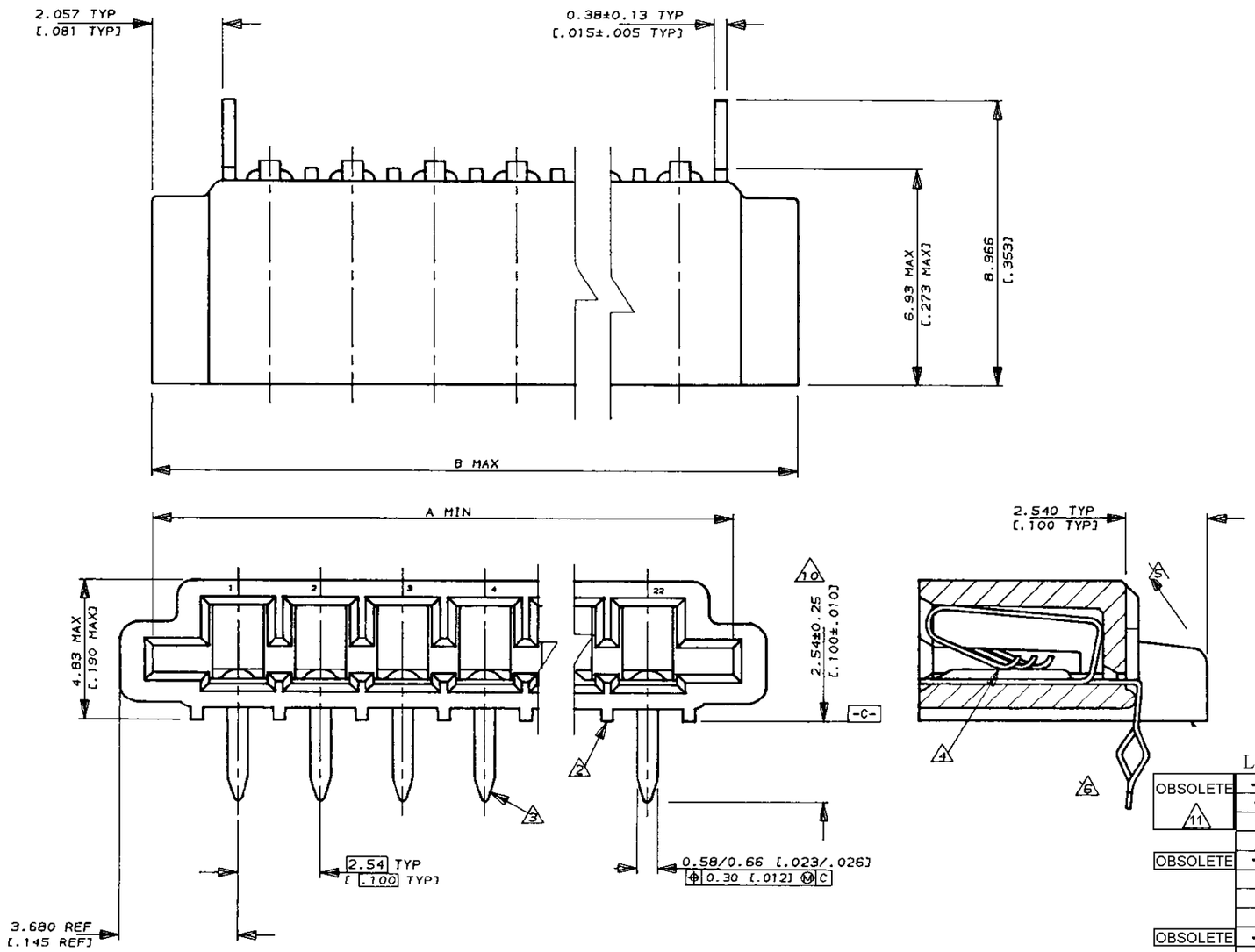

NOTES

1 CONNECTOR WILL ACCEPT FLEXIBLE PRINTED CIRCUIT OR FLAT FLEXIBLE CABLE ON 2.54 [.100] CENTERS IN A THICKNESS RANGE OF 0.127 TO 0.381 [.005 TO .015] IN CONTACT AREA

2 STAND-OFFS PREVENT SOLVENT ENTRAPMENT

3 LEAD-IN ON PINS FOR EASE OF INSERTION INTO BOARD

4 SEQUENTIAL CONTACTS REDUCE CABLE INSERTION FORCE

5 STABILIZING WING MAY BE REMOVED BY CUSTOMER IF NECESSARY

6 ALTERNATING CONTACT FORM RETAINS CONNECTOR IN P.C. BOARD DURING SOLDER OPERATION

7 ACCEPTS CABLE OR CIRCUITRY WITH EXPOSED CONDUCTORS FACING TOWARD OR AWAY FROM THE BOARD SURFACE

8 REFER TO APPLICATION SPEC 114-2062

9 MATERIAL
HOUSING : GLASS REINFORCED POLYESTER THERMOPLASTIC UL 94 V0 RATED, BLACK
CONTACT : PHOS BRONZE WITH MATTE TIN FINISH.

10 AREA INDICATED SHALL MEET SOLDERABILITY SPEC 109-11-1

11 **OBSOLETE PARTS: OBSOLETE CIS STREAMLINING PER D.RENAUD/D.SINISI**

LEAD FREE

	PART NO	PACKING	B	A	POS	PART NO (SUPERSEDED)
OBSOLETE 11	~~7-520314-2~~	--	60.78 [2.393]	58.62 [2.308]	22	2-520314-2
	~~7-520314-1~~		58.24 [2.293]	56.08 [2.208]	21	2-520314-1
	~~7-520314-0~~		55.70 [2.193]	53.54 [2.108]	20	2-520314-0
	6-520314-9		53.16 [2.093]	51.00 [2.008]	19	1-520314-9
OBSOLETE	~~6-520314-8~~		50.62 [1.993]	48.46 [1.908]	18	1-520314-8
	6-520314-7		48.08 [1.893]	45.92 [1.808]	17	1-520314-7
	6-520314-6		45.54 [1.793]	43.38 [1.708]	16	1-520314-6
	6-520314-5		43.00 [1.693]	40.84 [1.608]	15	1-520314-5
OBSOLETE	~~6-520314-4~~		40.46 [1.593]	38.30 [1.508]	14	1-520314-4
	6-520314-3		37.92 [1.493]	35.76 [1.408]	13	1-520314-3
	6-520314-2		35.38 [1.393]	33.22 [1.308]	12	1-520314-2
	6-520314-1		32.84 [1.293]	30.68 [1.208]	11	1-520314-1
	6-520314-0		30.30 [1.193]	28.14 [1.108]	10	1-520314-0
	5-520314-9		27.76 [1.093]	25.60 [1.008]	9	520314-9
	5-520314-8		25.22 [.993]	23.06 [.908]	8	520314-8
	5-520314-7		22.68 [.893]	20.52 [.808]	7	520314-7
	5-520314-6		20.14 [.793]	17.98 [.708]	6	520314-6
	5-520314-5		17.60 [.693]	15.44 [.608]	5	520314-5
	5-520314-4		15.06 [.593]	12.90 [.508]	4	520314-4
OBSOLETE	~~5-520314-3~~		12.52 [.493]	10.36 [.408]	3	520314-3
	5-520314-2		9.98 [.393]	7.82 [.308]	2	520314-2

LTR	(REVISION RECORD)	DR	CHK	DATE
S3	ECR-10-022530	KK	HMR	07FEB11
S2	ECO-10-000445	KK	AEG	11JAN10
S1	REVISED AS PER ECR-06-04332	PM	KS	21FEB06
S	REVISED **FRO00-0011-04**	SD	PCH	19FEB04
R	REVISED DY/EC/0920	LWY	SL	13.12.93
Q	REDRAWN DY/EC/0784	LWY	SL	30.7.93

Copyright ©1993

Copyright ©1993
TE MFG (S) PTE LTD.
ALL RIGHTS RESERVED.

TE Connectivity

(WIRE RANGE) mm² (AWG -) | (INSULATION DIA.) - mmø

(MATERIAL) 9 | (FINISH) CONTACTS MATTE TIN/LEAD PLATED

DR. WYLEE 30.7.93 | DE. A.SOH

CHK. SALLY 30.7.93 | APP. PETER de JONG

(NAME) TRIOMATE HORIZONTAL CABLE ENTRY FOR 1.57 [.062] THK P.C. BOARD

(GENERAL TOLERANCE) ±.38 [±.015]

SIZE A3 | LOC DY | (No.) 520314

(SCALE) 6:1 | REV. S3 | SHEET 1 OF 1

PRINT DIST

(CUSTOMER DRAWING)