THIS DRAWING IS UNPUBLISHED. RELEASED FOR PUBLICATION -,- .
© COPYRIGHT - By - ALL RIGHTS RESERVED.

| LOC | DIST |
|---|---|
| AF | 50 |

REVISIONS

| P | LTR | DESCRIPTION | DATE | DWN | APVD |
|---|---|---|---|---|---|
| | N | REVISED PER ECR-13-004343 | 30JUL13 | KH | KR |

1 MATES WITH .032±.001x.250 TAB

2 WIRE STRIP LENGTH .281

3 INSULATION SIZE .230 MAX DIA

4 DIMENSION DOES NOT INCLUDE TRIM BURR

5 .015 MAX CARRIER TRIM BURR PER SIDE IS ALLOWABLE IN THE SHADED AREA

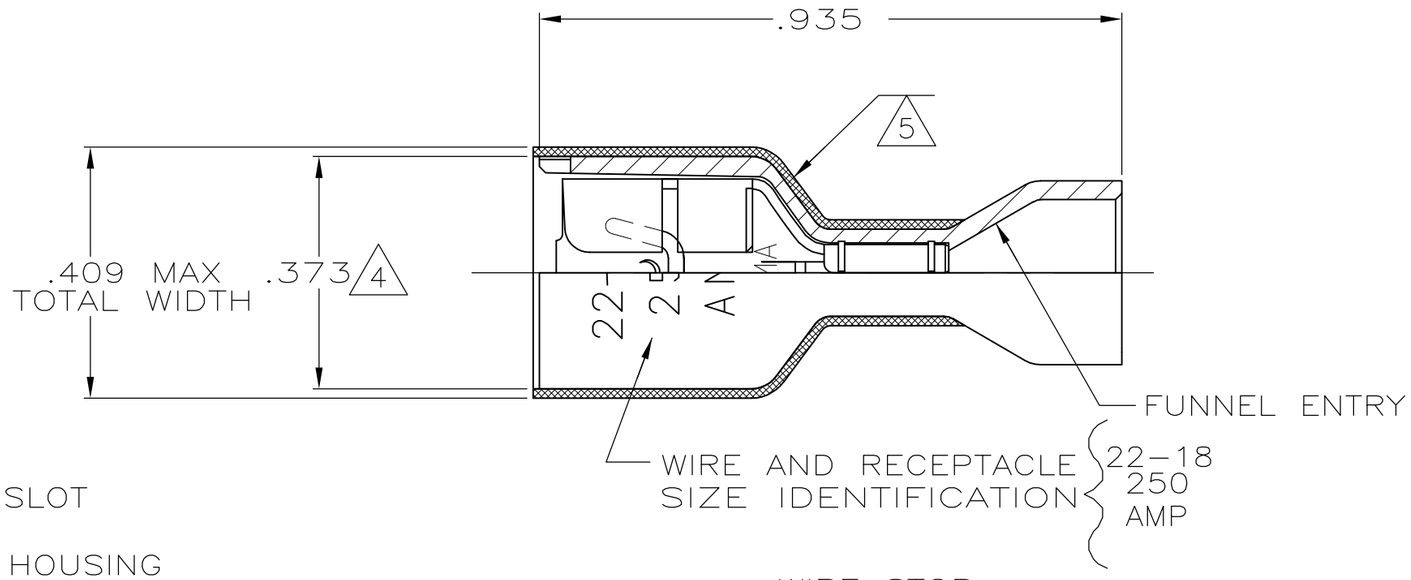


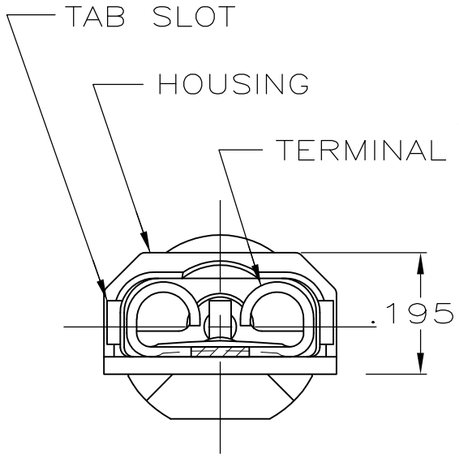


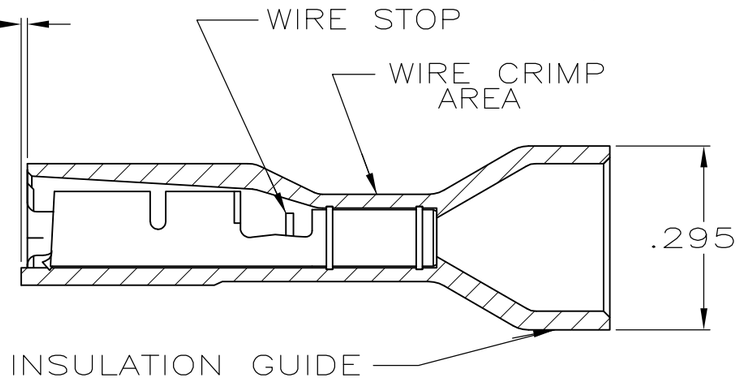


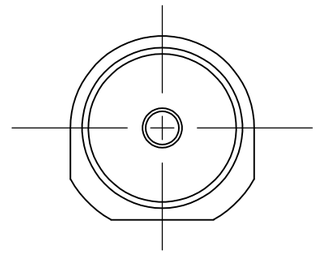

| | MATERIAL & FINISH | PART NO |
|---|---|---|
| OBSOLETE | ~~HOUSING:NYLON,COLOR-RED TRANSLUCENT RECEPTACLE:#3 HARD PH BRONZE,TIN~~ | ~~2-520264-4~~ |
| | HOUSING:NYLON,COLOR-RED TRANSLUCENT RECEPTACLE:BRASS,TIN | 2-520264-2 |

THIS DRAWING IS A CONTROLLED DOCUMENT.

DIMENSIONS: INCHES

TOLERANCES UNLESS OTHERWISE SPECIFIED:

| | |
|---|---|
| 0 PLC | ± - |
| 1 PLC | ± - |
| 2 PLC | ± - |
| 3 PLC | ± .015 |
| 4 PLC | ± - |
| ANGLES | ± - |

MATERIAL: SEE TABLE

FINISH: SEE TABLE

| | | |
|---|---|---|
| DWN | P FORTNEY | 9/30/88 |
| CHK | MS FEHER | 9/30/88 |
| APVD | K RANDOLPH | 9/30/88 |
| PRODUCT SPEC | 108-2043 | |
| APPLICATION SPEC | 114-2123 | |
| WEIGHT | - | |

TE Connectivity

NAME: RECEPTACLE ASSY,ULTRA-FAST, LOOSE PIECE,.250 SERIES,22-18 AWG

| SIZE | CAGE CODE | DRAWING NO | RESTRICTED TO |
|---|---|---|---|
| A3 | 00779 | C-520264 | - |

CUSTOMER DRAWING

| SCALE | SHEET | REV |
|---|---|---|
| 4:1 | 1 OF 1 | N |