THIS DRAWING IS UNPUBLISHED. RELEASED FOR PUBLICATION ,19 .
© COPYRIGHT 19 BY AMP INCORPORATED. ALL RIGHTS RESERVED.

LOC	DIST
DY	-

REVISIONS

P	LTR	DESCRIPTION	DATE	DWN	APVD
	P1	REVISED PER ECR-15-003992	16MAR2015	I.T	W.H

PROJ NO. 593-312

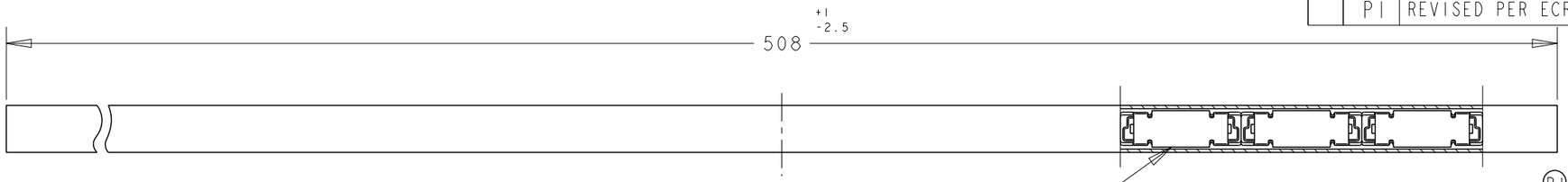

SECT A-A

1 OBSOLETE PARTS: OBSOLETE CIS STREAMLINING PER D.RENAUD/D.SINISI

(P1) 2 RE-ACTIVE PARTS

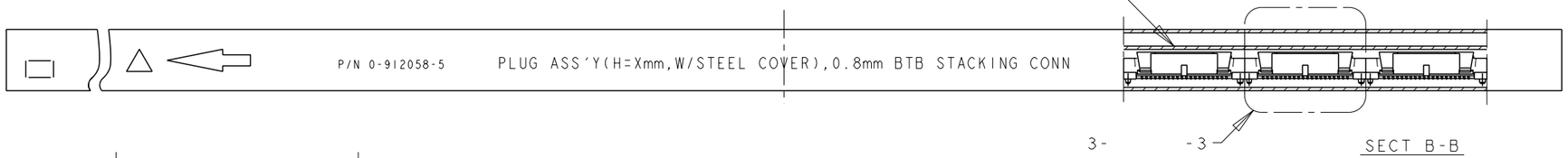

SECT B-B

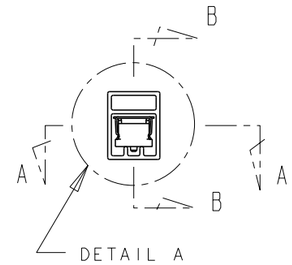

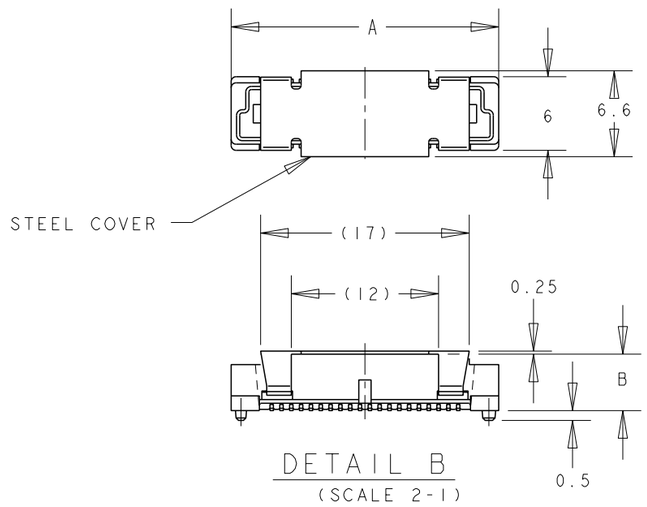

DETAIL B
(SCALE 2-1)

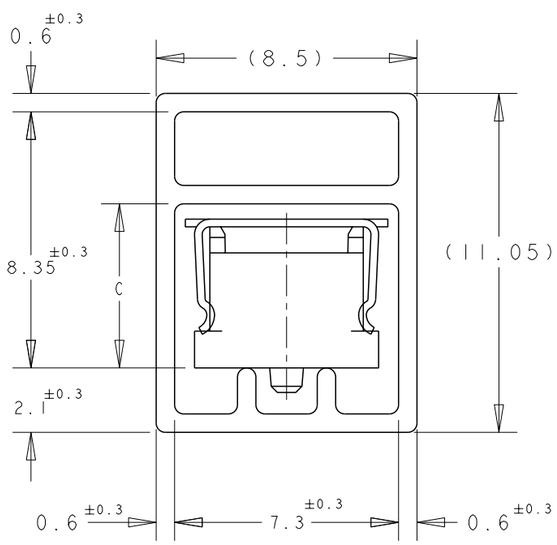

DETAIL A
(SCALE 5-1)

QTY	HEIGHT TYPE	C	B	A	CONN P/N	POS.	PART NO.	QTY	HEIGHT TYPE	C	B	A	CONN P/N	POS.	PART NO.
5				85.8	1-	-0	200	7-	-0	5				85.8	1-	-0	200	3-	-0
6				77.8		-9	180	6-	-9	6				77.8		-9	180	2-	-9
6				69.8		-8	160	~~6-~~	~~-8~~	6				69.8		-8	160	2-	-8
7				61.8		-6	140	6-	-6	7				61.8		-6	140	~~2-~~	~~-6~~
9				53.8		-5	120	6-	-5	9				53.8		-5	120	~~2-~~	~~-5~~
10				45.8		-4	100	6-	-4	10				45.8		-4	100	2-	-4
12				37.8		-3	80	~~6-~~	~~-3~~	12				37.8		-3	80	2-	-3
16				29.8		-2	60	~~6-~~	~~-2~~	16				29.8		-2	60	~~2-~~	~~-2~~
22	8H	8.35	7.6	21.8	5179031-1		40	~~6-~~	~~5179230-1~~	22	6H	6.35	5.6	21.8	5179029-1		40	~~2-~~	~~5179230-1~~
5				85.8	1-	-0	200	5-	-0	5				85.8	1-	-0	200	1-	-0
6				77.8		-9	180	4-	-9	6				77.8		-9	180		-9
6				69.8		-8	160	~~4-~~	~~-8~~	6				69.8		-8	160		~~-8~~
7				61.8		-6	140	4-	-6	7				61.8		-6	140		~~-6~~
9				53.8		-5	120	4-	-5	9				53.8		-5	120		-5
10				45.8		-4	100	~~4-~~	~~-4~~	10				45.8		-4	100		-4
12				37.8		-3	80	~~4-~~	~~-3~~	12				37.8		-3	80		-3
16				29.8		-2	60	~~4-~~	~~-2~~	16				29.8		-2	60		~~-2~~
22	7H	7.35	6.6	21.8	5179030-1		40	~~4-~~	~~5179230-1~~	22	5H	5.35	4.6	21.8	5177984-1		40		~~5179230-1~~

THIS DRAWING IS A CONTROLLED DOCUMENT FOR AMP INCORPORATED. IT IS SUBJECT TO CHANGE AND THE CONTROLLING ENGINEERING ORGANIZATION SHOULD BE CONTACTED FOR THE LATEST REVISION.

DIMENSIONS: mm

TOLERANCES UNLESS OTHERWISE SPECIFIED:

0 PLC	±-
1 PLC	±0.20
2 PLC	±0.25
3 PLC	±0.30
4 PLC	±-
ANGLES	±3°

MATERIAL -

FINISH -

DWN FLORENCE TAN 03SEP04
CHK ERIC TNG
APVD SF LEONG
PRODUCT SPEC -
APPLICATION SPEC -
WEIGHT -

CUSTOMER DRAWING

TE Tyco Electronics (Singapore) Pte. Ltd.

NAME
PLUG A'SSY WITH STEEL COVER
(TUBE PACK)
FH 0.8mm PITCH B-T-B CONNECTOR

SIZE	CAGE CODE	DRAWING NO
A3	00779	C-5179230

SCALE 1:1 SHEET 1 OF 1 REV P1

AMP 1470-19 REV 09MAY94

Pro/ENGINEER DRAWING