THIS DRAWING IS UNPUBLISHED. RELEASED FOR PUBLICATION OCT ,1988.
© COPYRIGHT 1988 By – ALL RIGHTS RESERVED.

REVISIONS

P	LTR	DESCRIPTION	DATE	DWN	APVD
	C	REVISED PER ECO-17-008763	22JAN2018	RG	SH

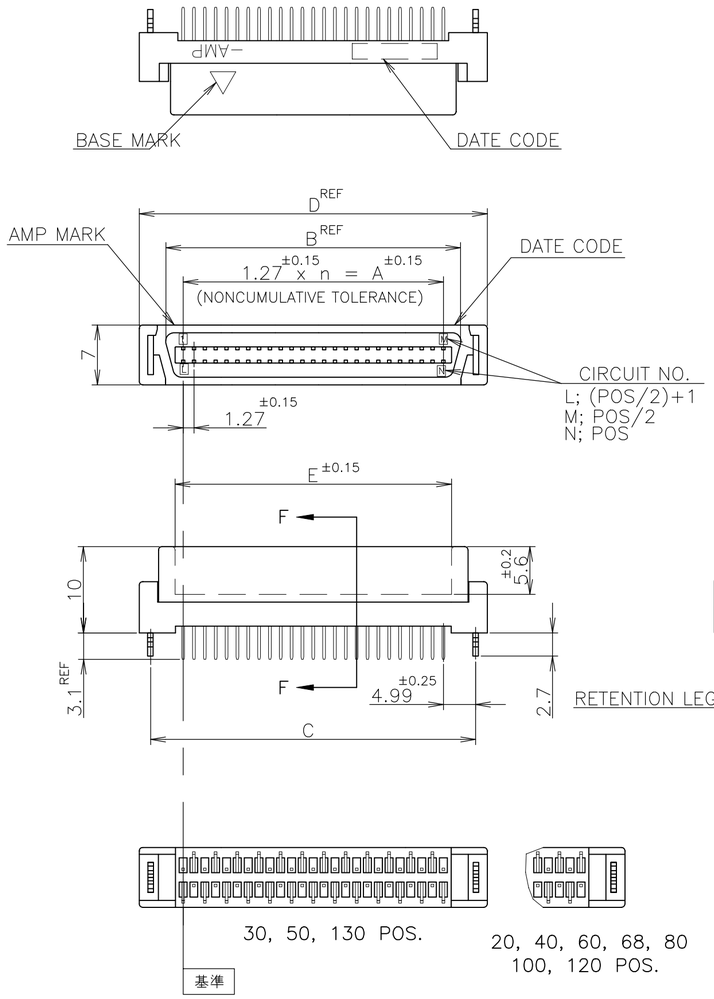

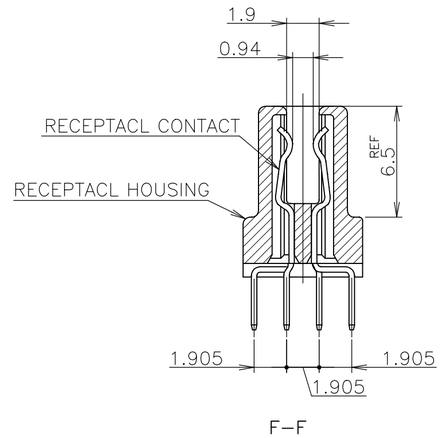

1 NUMBER "n" IS COUNTED FROM DATUM
(CIRCUIT NO.1 IS "AMP" MARK SIDE.)
2 MATERIAL: HOUSING, 66 NYLON (GF) UL 94V-0, BLACK.
: CONTACT, PHOSPHOR BRONZE.
: RETENTION LEG; BRASS.
3 FINISH: CONTACT; Au AT CONTACT AREA (SEE TABLE),
TIN AT TINE, OVER Ni.
RETENTION LEG; TIN UNDER Ni.
4 P.C. BOARD THK MUST BE 1.6 $^{+0.15}_{-0.1}$ FOR CARD EDGE CONNECTOR

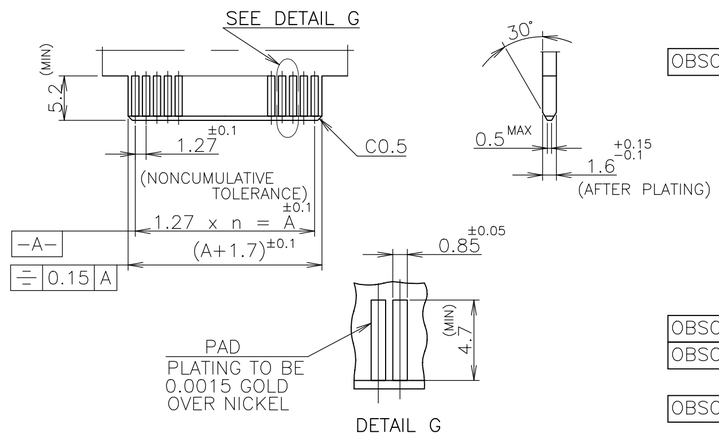

RECOMMENDED P.C. BOARD DIMMENSIONS. 4

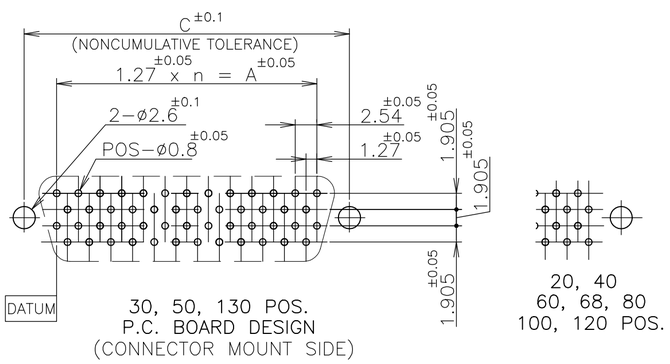

	PART NO.	Au PLATE	POS.	n	A	B	C	D	E
OBSOLETE	~~6–~~	~~–2~~	~~130~~	~~64~~	~~81.28~~	~~86.82~~	~~91.25~~	~~93.90~~	~~83.18~~
	6–	–1	120	59	74.93	80.47	84.90	87.55	76.83
OBSOLETE	~~6–~~	~~–0~~	~~100~~	~~49~~	~~62.23~~	~~67.77~~	~~72.20~~	~~74.85~~	~~64.13~~
OBSOLETE	~~5–~~	~~–9~~	~~80~~	~~39~~	~~49.53~~	~~55.07~~	~~59.50~~	~~62.15~~	~~51.43~~
	5–	–8	68	33	41.91	47.45	51.88	54.53	43.81
	5–	–7	60	29	36.83	42.37	46.80	49.45	38.73
	5–	–6	50	24	30.48	36.02	40.45	43.10	32.38
	5–	–5	40	19	24.13	29.67	34.10	36.75	26.03
	5–	–3	30	14	17.78	23.32	27.75	30.40	19.68
	5–	–1	0.00076	20	9	11.43	16.97	21.40	24.05	13.33
OBSOLETE	~~4–~~	~~–2~~	~~130~~	~~64~~	~~81.28~~	~~86.82~~	~~91.25~~	~~93.90~~	~~83.18~~
	4–	–1	120	59	74.93	80.47	84.90	87.55	76.83
	4–	–0	100	49	62.23	67.77	72.20	74.85	64.13
	3–	–9	80	39	49.53	55.07	59.50	62.15	51.43
	3–	–8	68	33	41.91	47.45	51.88	54.53	43.81
	3–	–7	60	29	36.83	42.37	46.80	49.45	38.73
	3–	–6	50	24	30.48	36.02	40.45	43.10	32.38
	3–	–5	40	19	24.13	29.67	34.10	36.75	26.03
	3–	–3	30	14	17.78	23.32	27.75	30.40	19.68
	3–	–1	0.0005	20	9	11.43	16.97	21.40	24.05	13.33
OBSOLETE	~~1–~~	~~–2~~	~~130~~	~~64~~	~~81.28~~	~~86.82~~	~~91.25~~	~~93.90~~	~~83.18~~
OBSOLETE	~~1–~~	~~–1~~	~~120~~	~~59~~	~~74.93~~	~~80.47~~	~~84.90~~	~~87.55~~	~~76.83~~
	1–	–0	100	49	62.23	67.77	72.20	74.85	64.13
OBSOLETE		~~–9~~	~~80~~	~~39~~	~~49.53~~	~~55.07~~	~~59.50~~	~~62.15~~	~~51.43~~
		–8	68	33	41.91	47.45	51.88	54.53	43.81
		–7	60	29	36.83	42.37	46.80	49.45	38.73
		–6	50	24	30.48	36.02	40.45	43.10	32.38
		–5	40	19	24.13	29.67	34.10	36.75	26.03
		–3	30	14	17.78	23.32	27.75	30.40	19.68
	5175475–1	0.0002	20	9	11.43	16.97	21.40	24.05	13.33

5175475

LEAD FREE

GENERAL TOLERANCE
10 ≧ : ±0.2
30≧ > 10: ±0.25
100 ≧ > 30: ±0.3
ANGLES: ±3°

THIS DRAWING IS A CONTROLLED DOCUMENT.

DIMENSIONS: mm

TOLERANCES UNLESS OTHERWISE SPECIFIED:
0 PLC ± –
1 PLC ± –
2 PLC ± –
3 PLC ± –
4 PLC ± –
ANGLES ± –

MATERIAL 2
FINISH 3

DWN Julyee Zhu 20AUG2004
CHK Steven Yao 20AUG2004
APVD Ikuo Enomoto 20AUG2004
PRODUCT SPEC 108-60038
APPLICATION SPEC –
WEIGHT 0.000000

TE Connectivity Ltd.

NAME
AMP CHAMP .050 CONNECTOR(B-T-B)
RECEPTACLE CONNECTOR
VERTICAL WITH RETENTION LEG

SIZE A2 | CAGE CODE 00779 | DRAWING NO C-5175475 | RESTRICTED TO

CUSTOMER DRAWING | SCALE NTS | SHEET 1 OF 1 | REV C

1471-9 (1/15)