© 2023 TE Connectivity. All Rights Reserved.

REVISIONS					
P	LTR	DESCRIPTION	DATE	DWN	APVD
	A1	NEW DRAWING	29SEP2023	ASB	JDB
	D1	DRAWING RE-CREATED IN CREO	26DEC2023	ASB	JDB
	D2	REEL CORE DIA CHANGE	08AUG2024	SS	LET

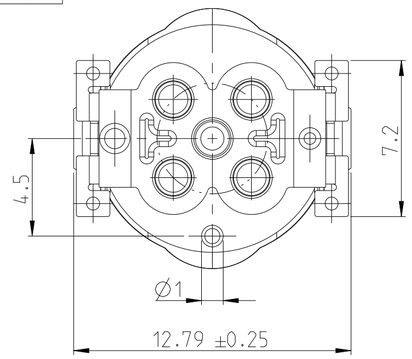

TAPE ON REEL PACKAGING ACCORDING TO DIN IEC 60286-3
PACKAGING UNIT: 75 PCS

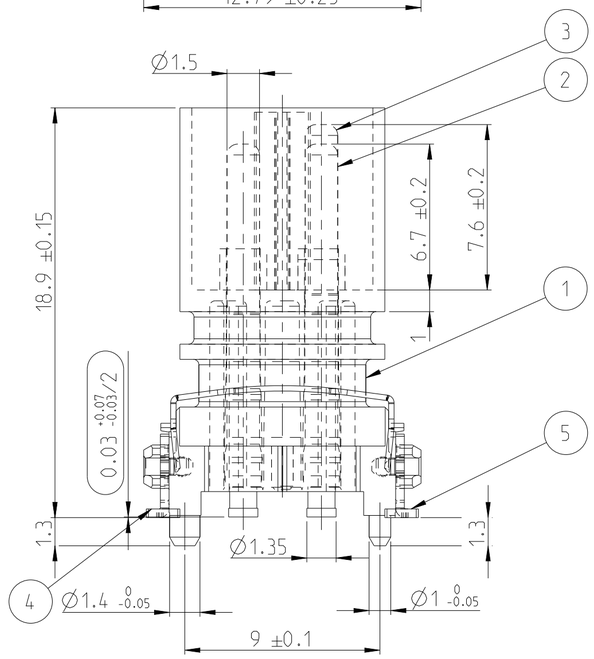

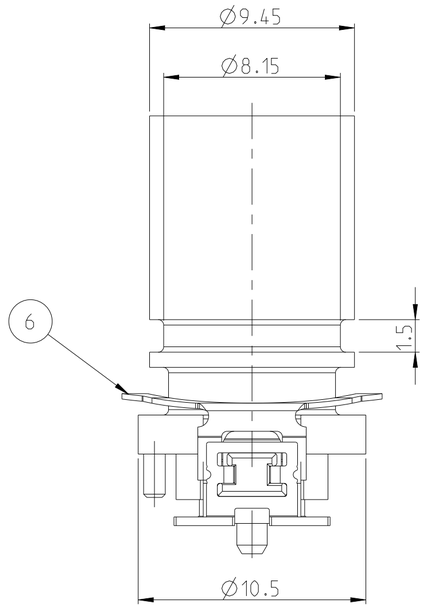

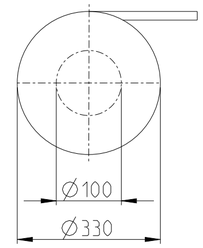

REEL OFF DIRECTION

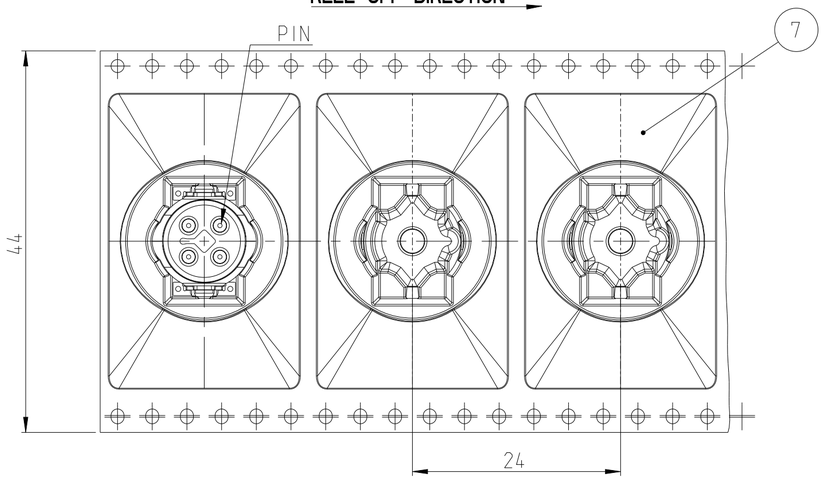

1. DRAWING SPECIFICATION ACCORDING TO DOCUMENT 5_3_16-DOC-1806-00915

2. COPLANARITY OF ALL CLIPS <= 0.1MM

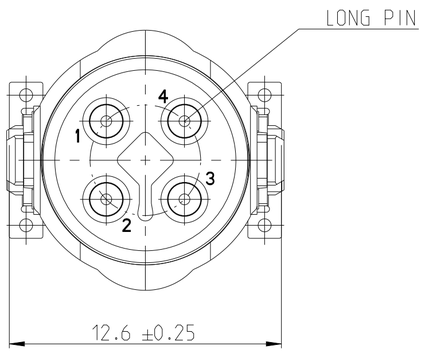

PCB-LAYOUT PROPOSAL

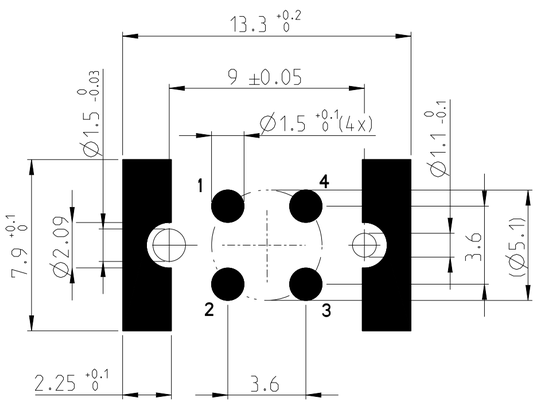

SCALE 2:1
3D VIEW

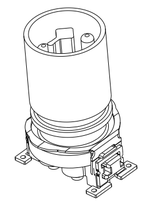

1	-	TAPE AND REEL	7
1	-	SHIELD	6
1	-	SOLDER CLIP LEFT	5
1	-	SOLDER CLIP RIGHT	4
1	-	PIN (LONG)	3
3	-	PINS (SHORT)	2
1	-	HOUSING	1
474580-E	**REV**	**DESCRIPTION**	**ITEM NO.**
-	**REV OF EACH ASSY NO. (WHEN BLANK, USE DWG. REV)**		
QTY	**PARTS LIST**		

V=TURNED CONTACT (PCB SIDE CAN BE USED WITH POTTED COMPOUND)
*=VERSION: WITH SHIELD, WITH CUT-IN, WITHOUT SEAL

INSPECTION LEVEL 1: CONTROL CHART REQUIRED
/1 PROOF OF PROCESS CAPABILITY OR 100% TEST IF PROCESS CAPABILITY IS NOT ACHIEVED

INSPECTION LEVEL 2 AND 3: CONTROL CHART REQUIRED
/2 PROOF OF MEAN VALUE, STANDARD DEVIATION AND MACHINE CAPABILITY

/3 PROOF OF VALUES OR PROOF OF ATTRIBUTIVE

INFORMATION ON THE SCOPE OF TESTING AND DETECTION BY ERNI VA 7.3.2.3

THIS DRAWING IS A CONTROLLED DOCUMENT.

DIMENSIONS: mm

TOLERANCES UNLESS OTHERWISE SPECIFIED: ISO 2768-1: 1989m ISO 8015
0 PLC ±
1 PLC ±
2 PLC ±
3 PLC ±
4 PLC ±
ANGLES ±

MATERIAL - -
FINISH - -

DWN B S ADRUSH 29SEP2023
CHK M SZELAG 30SEP2023
APVD J DE BRUIJN 30SEP2023
PRODUCT SPEC 108-94887
APPLICATION SPEC 114-94781
WEIGHT -

TE Connectivity

NAME M12 MALE, T CODE, 4P, 10.5MM SMT V *
-

SIZE	CAGE CODE	DRAWING NO	RESTRICTED TO
A2	00779	C-474580-E	-

CUSTOMER DRAWING | SCALE 5:1 | SHEET 1 OF 1 | REV D2

1471-9 (3/13)