THIS DRAWING IS UNPUBLISHED. RELEASED FOR PUBLICATION – ,N/A .
© COPYRIGHT N/A By – ALL RIGHTS RESERVED.

LOC	DIST
—	—

REVISIONS

P	LTR	DESCRIPTION	DATE	DWN	APVD
	Y	REV PER ECO-15-016251	13NOV15	KG	CD

1 THIS RECEPTACLE WILL MATE WITH ANY 3C3, SIZE 2 PLUG IN AMPLIMITE SERIES.

2 THIS CONNECTOR ACCEPTS (3) POWER 8, OR COAX SOCKET CONTACTS IN POSITIONS A1 THRU A3, PURCHASED SEPARATELY.

3 STEEL PER ASTM-A-109.

4 BRASS PER MIL-C-50 AND ASTM-B-36 UNS NO. C26000.

5 FINISH: TIN PER ASTM-B-545 .000400 MIN THK OVER COPPER PER AMS2418 .000050 MIN THK.

6 GOLD PLATED PER MIL-G-45204 TYPE II, GRADE C, CLASS 1 OVER COPPER PER MIL-C-14550, CLASS IV.

7 FINISH: PLATED CADMIUM PER QQ-P-416, TYPE II, CLASS 2, OVER COPPER PER MIL-C-14550, CLASS IV.

8 IF CUSTOMER PART NUMBER DOES NOT FIT ON FRONT SHELL NEAR SIDE, THEN SPLIT BETWEEN FRONT AND REAR SHELL FAR SIDE.

9 FINISH: ZINC PLATE PER ASTM-B-633 .000200-.000400 THK WITH SUPPLEMENTARY CHROMATE (Cr3+).

10 MANUFACTURER'S NAME, BRAND OR LOGO AND DATE CODE NARKED ON FAR SIDE. CUSTOMER PART NO MARKED ON NEAR SIDE

11 MFG'S PART NUMBER MARKED ON FAR SIDE

12 MARK DATE CODE AND CUSTOMER PART NUMBER, FAR SIDE

13 MARK MFG PART NUMBER ON NEAR SIDE

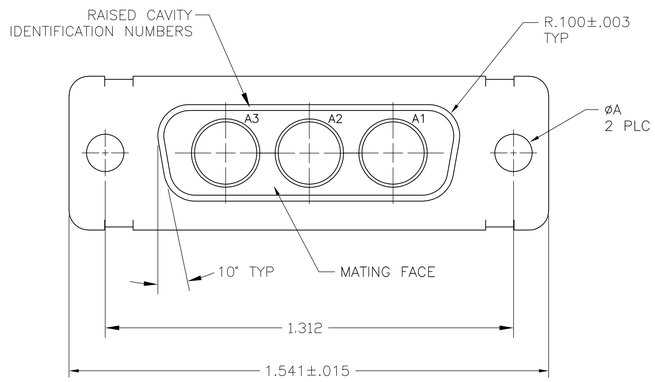

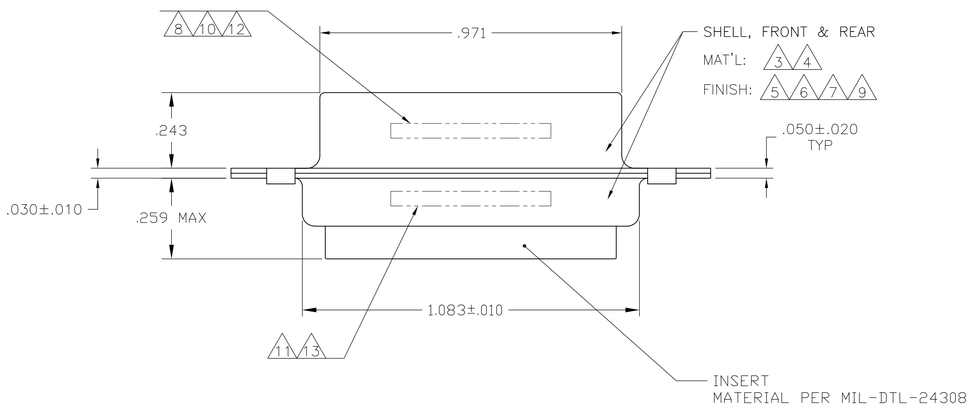

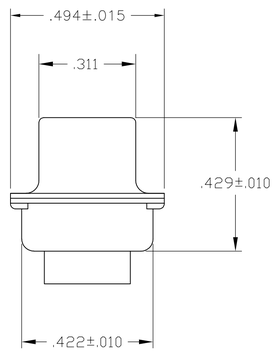

	3 9 10 11	.120	–	5-445705-4
	3 7 12 13	.120	T5935-0103-005	445705-8
	3 5 10 11	.120	–	445705-7
OBSOLETE	4 6 10 11	.120	A010942-0042	445705-6
	4 6 8 10 11	.120	B010942-0014	445705-5
	3 7 10 11	.120	–	445705-4
	4 6 8 10 11	.154	311P405-7S-B-15	445705-3
	4 6 8 10 11	.120	311P405-7S-B-12	445705-2
	3 5 10 11	.120	–	445705-1
	REMARKS	øA	CUSTOMER PART NO.	PART NO.

THIS DRAWING IS A CONTROLLED DOCUMENT.

DIMENSIONS: INCHES

TOLERANCES UNLESS OTHERWISE SPECIFIED:
0 PLC ± –
1 PLC ± –
2 PLC ± –
3 PLC ± .005
4 PLC ± –
ANGLES ± 0°30'

MATERIAL: SEE TABLE

FINISH: SEE TABLE

DWN C.C.THOMAS 01NOV88
CHK A.EMADI 02NOV88
APVD A.EMADI 02NOV88

PRODUCT SPEC —

APPLICATION SPEC —

WEIGHT —

TE Connectivity

NAME: RECEPTACLE ASSEMBLY AMPLIMITE 3C3 SIZE 2, SERIES 109, COAX MIX

SIZE	CAGE CODE	DRAWING NO	RESTRICTED TO
A1	00779	C-445705	—

CUSTOMER DRAWING

SCALE 4:1 SHEET 1 OF 1 REV Y