DRAWING MADE IN THIRD ANGLE PROJECTION

LOC CM DIST 53

© COPYRIGHT 1972, 81 BY AMP INCORPORATED, HARRISBURG, PA. ALL INTERNATIONAL RIGHTS RESERVED. AMP INCORPORATED PRODUCTS COVERED BY U. S. AND FOREIGN PATENTS AND/OR PATENTS PENDING.

REVISIONS

P	F	ZONE	LTR	DESCRIPTION	DATE	APPROVED
✓	✓		F	REVISED AND REDRAWN PER M-6004	3-17-81	MSF/DH.
✓			F_1	RESTORED	9/29/85	BKD/RS
✓			G	OBSOLETE 1-1, 1-2, 1-3, 1-4, 1-5, 1-6, 1-7, & 1-8 PER CM-473	2-27-85	KW/RS
✓			H	OBSOLETE 1--0 PER CM-861	7-18-88	PH RS
			J	EB00-0448-97	4-2-97	GCO

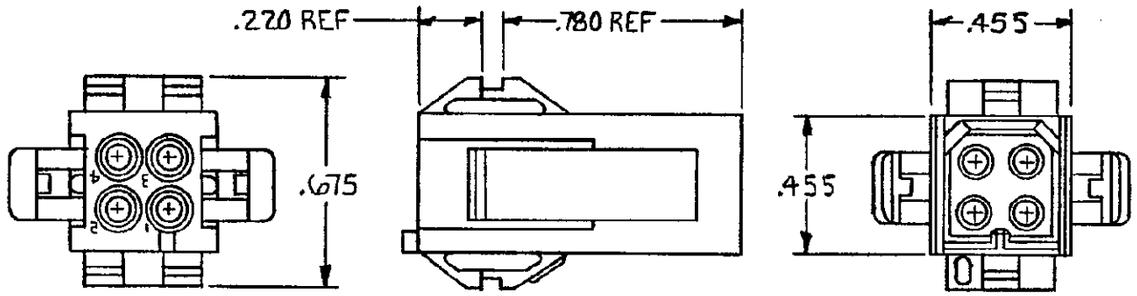

1 MATES WITH HOUSING 350240.

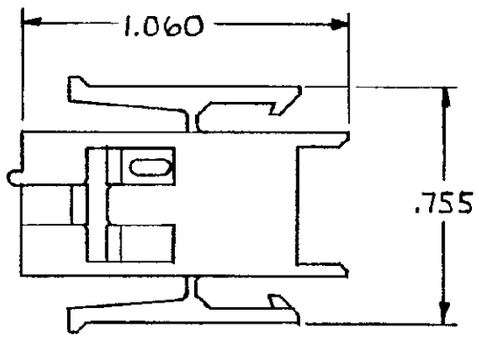

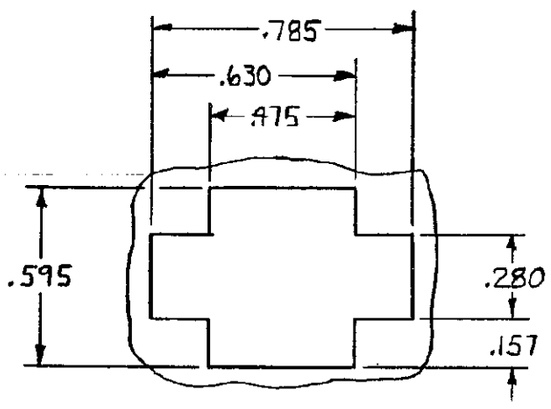

RECOMMENDED PANEL CUTOUT
TOLERANCE ±.005
PANEL .068 MAX THICK

	COLOR	PART NO
OBSOLETE	~~BLACK~~	~~1-350233-9~~

UNLESS OTHERWISE SPECIFIED DIMENSIONS ARE IN INCHES. TOLERANCES ON: DECIMALS ±.015 ANGLES ±—

MATERIAL: NYLON 94V-2

COLOR: SEE TABLE

CONTRACT NO

DR M. Feher 3-17-81

CHK D.S. Heide 3/24/81

APPD J.C.M. 3-26-81

APPD

DSGN APPD

OTHER APPD

AMP — AMP INCORPORATED Harrisburg, Pa.

NAME: HOUSING, CAP, MRII, 4 POSITION

SIZE: B | CODE IDENT NO: 00779 | DRAWING NO: 350233

SCALE: 2-1 | SHEET: —

AMP 1470-15 REV 8-79

CUSTOMER DRAWING