EC No.

Battery Disconnector 500A

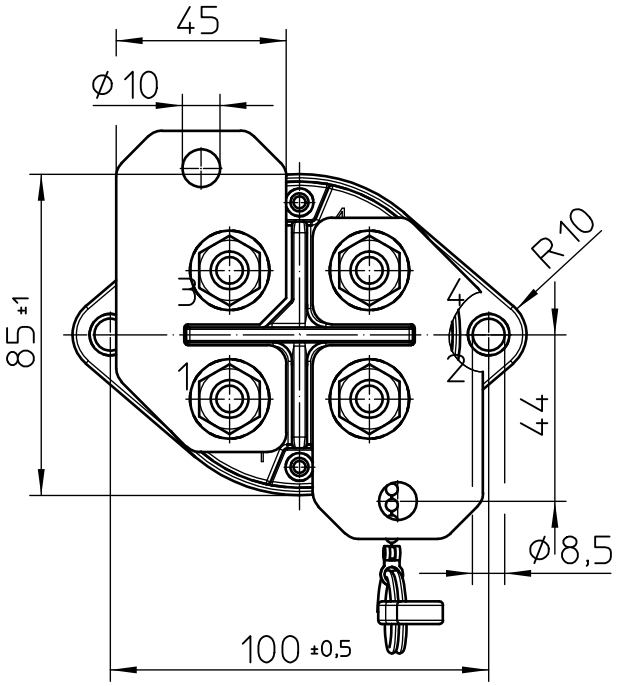

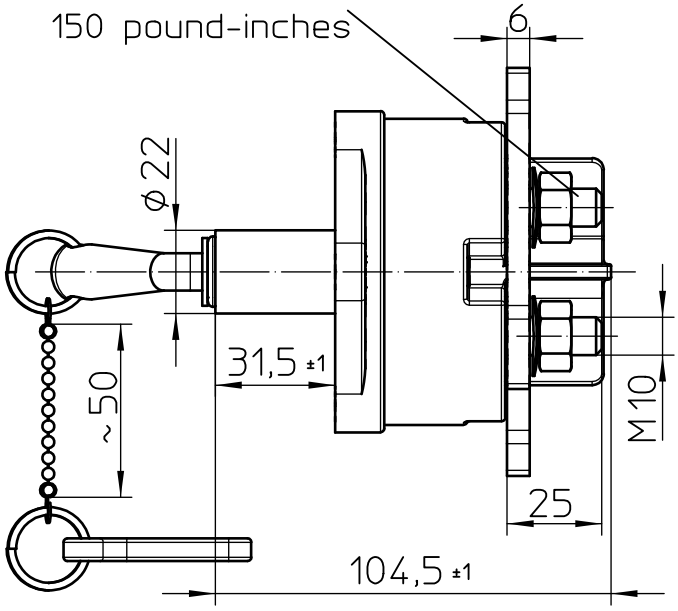

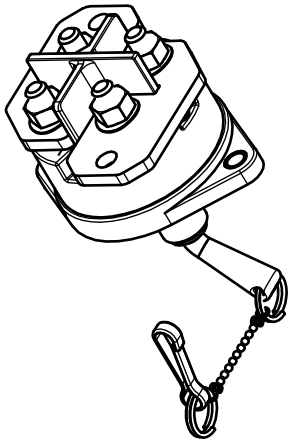

Circuit

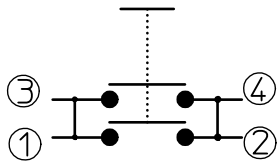

Technical Data:

Case Material: Cover ..... Vyncolit black
Base Plate ..... PA GF black
Switch Lever Material ..... PA GF black
Min. Insulation Resistance 100MOhm
Dielectric Withstanding Voltage ..... 1050V-1min.
Max. Contact Drop during Resistive Load 150mV
Voltage ..... up to 32VDC
Duty Rating 2x500A
Overload ..... 2x2000A-1.5min.
..... 2x2500A-10sec.
Sealing ..... IP 67/ IEC 529
Vibration 10G/ 18-500Hz
Weight ..... 1.010kg/2.230 Pound
Temperature Range ..... -40°C to +85°C
Wire Section (At Nominal Load) ..... min. 250mm2
Switch lever ..... removeable,
Spare P/N 35.500.045

	Date	Name	mm	Scale 1:2	KUSUNG Elektrotechnik - GmbH & Co KG D - 72218 Wildberg	Drawing No: 35-557
Drawn	11.08.2003	Mielk	General Tolerances DIN ISO 2768 mK			
Check	25.08.2010	Mielk				NSN.: