EC No.	Battery Disconnector 2x500A	Page 1 of 1

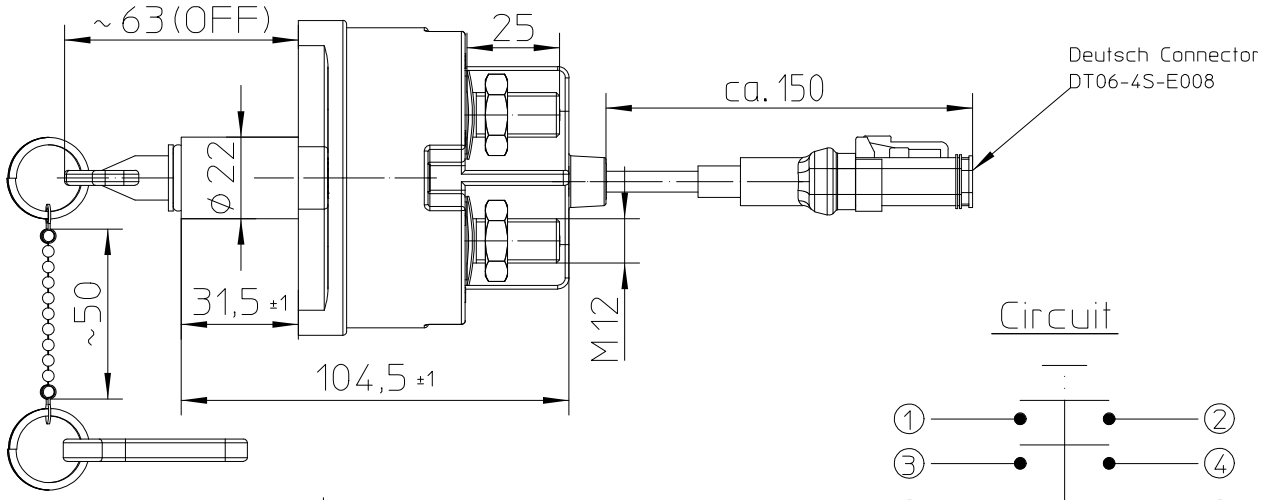

Circuit

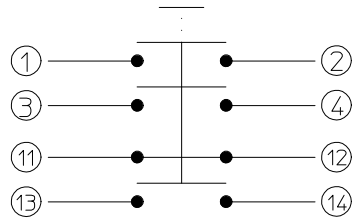

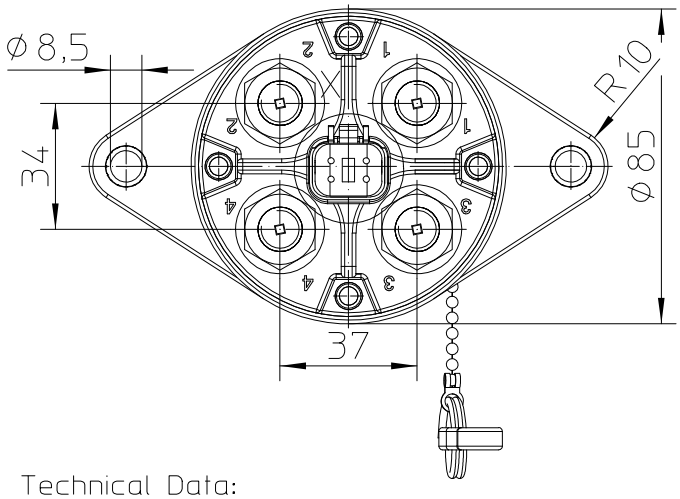

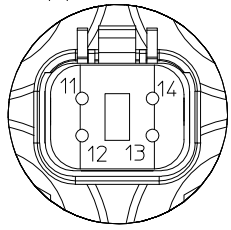

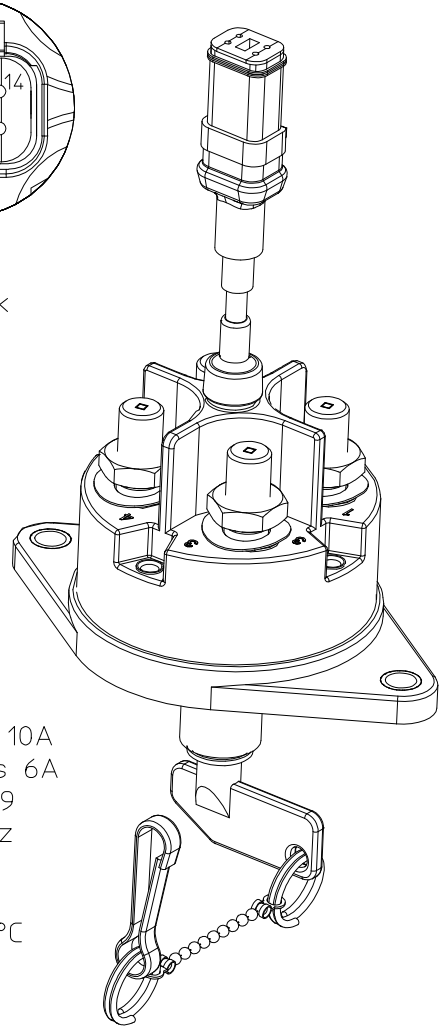

Technical Data:

Case Material Cover	Vyncolit black
Base Plate	PA GF black
Switch Lever Material	PA GF red
Min. Insulation Resistance	100MOhm
Dielectric Withstanding Voltage	1050V-1min.
Max. Contact Drop During Resistive Load	150mV
Voltage	up to 32VDC
Duty Rating	2x500A
Overload	1500A-4min.
	2000A-1.5min.
	2500A-10sec.
Auxiliary Contact:	
Continuous Current	10A
Make and Brake	24V L/R 5ms 10A
	24V L/R 20ms 6A
Sealing	IP 67/ IEC 529
Vibration	10G/ 18-500Hz
Shock	50G/ 11ms
Weight	750g
Temperature Range	-40°C to +85°C
Wire Section (at nominal Load Main Terminals)	min. 250mm2
Switch Lever	removeable
Max. Torque (Main Terminals)	18-22Nm

	Date	Name	mm	Scale 1:2		Drawing No: 35-525-260-R-A2
Drawn	18.01.2019	Mielk	General Tolerances DIN ISO 2768 cL		KUSING	
Check	18.01.2019	Grind				NSN.: