EC No.

Battery Disconnector 2x500A

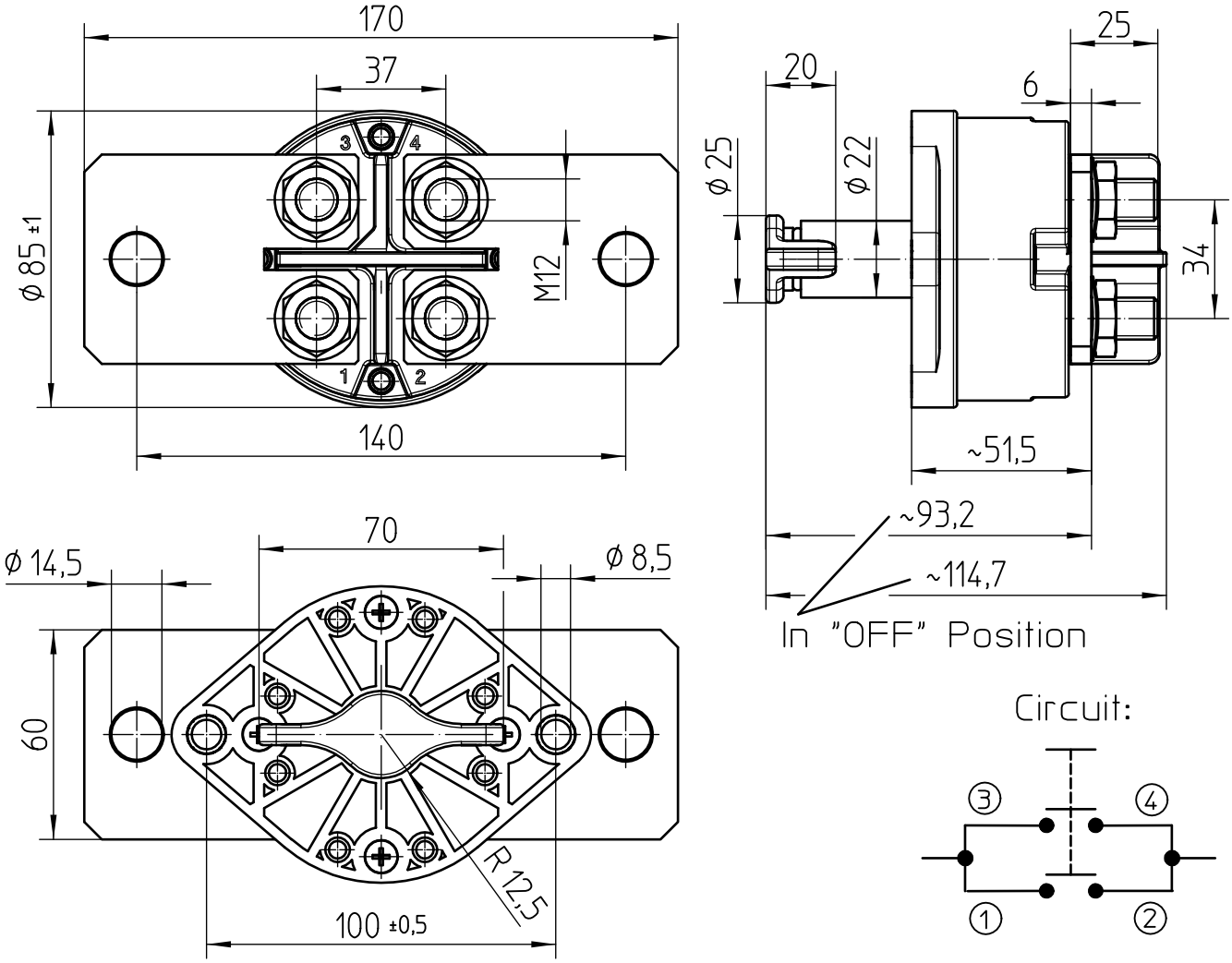

Technical Data:

Case Material:Cover:.....Vyncolit black
Base Plate:.....PA GF black
Switch Lever Material:.....PA GF red
Min. Insulation Resistance:.....100MOhm
Dielectric Withstanding Voltage:.....1050V-1min
Max. Contact Voltage Drop:.....150mV
Voltage:.....up to 32VDC
Continuous Rating:.....2x500A
Overload:.....2x2000A-1.5min
.....2x2500A-10sec
Sealing:.....IP 67/IEC 529
Vibration:.....10G 18-500Hz
Weight:.....1100g/2.5Pound
Temperature Range:.....-40°C to +85°C
Wire Section(at nominal load):.....min.250mm2
Key:.....removeable,red
Max. Tourque (Main Contacts):.....18-22Nm

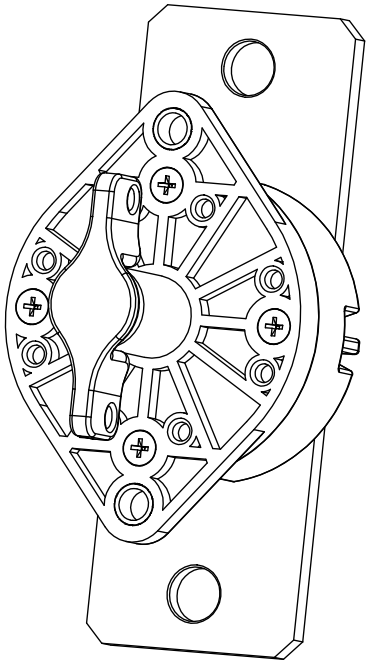

	Date	Name	mm	Scale 1:2		Drawing No:
Drawn	26.07.2007	Kaise	General Tolerances		KUSING	35-524-230-R-900
Check	03.09.2007	Grind				Liebherr-Ident-Nr.: 10444146