© – TE Connectivity. All Rights Reserved.

REVISIONS					
P	LTR	DESCRIPTION	DATE	DWN	APVD
	M4	REVISED PER ECR-25-240578	13JUN2025	SA	DSC

300 VOLT MAX		
AMP WIRE RANGE	UL Listed FILE E13288	CSA LR7189 Certified
16-14 AWG SOLID OR STRANDED	16-14 AWG SOLID OR STRANDED	16-14 AWG SOLID OR STRANDED

600 VOLT MAX		
AMP WIRE RANGE	UL Listed FILE E13288	CSA LR7189 Certified
16-14 AWG STRANDED	16-14 AWG STRANDED	16-14 AWG STRANDED

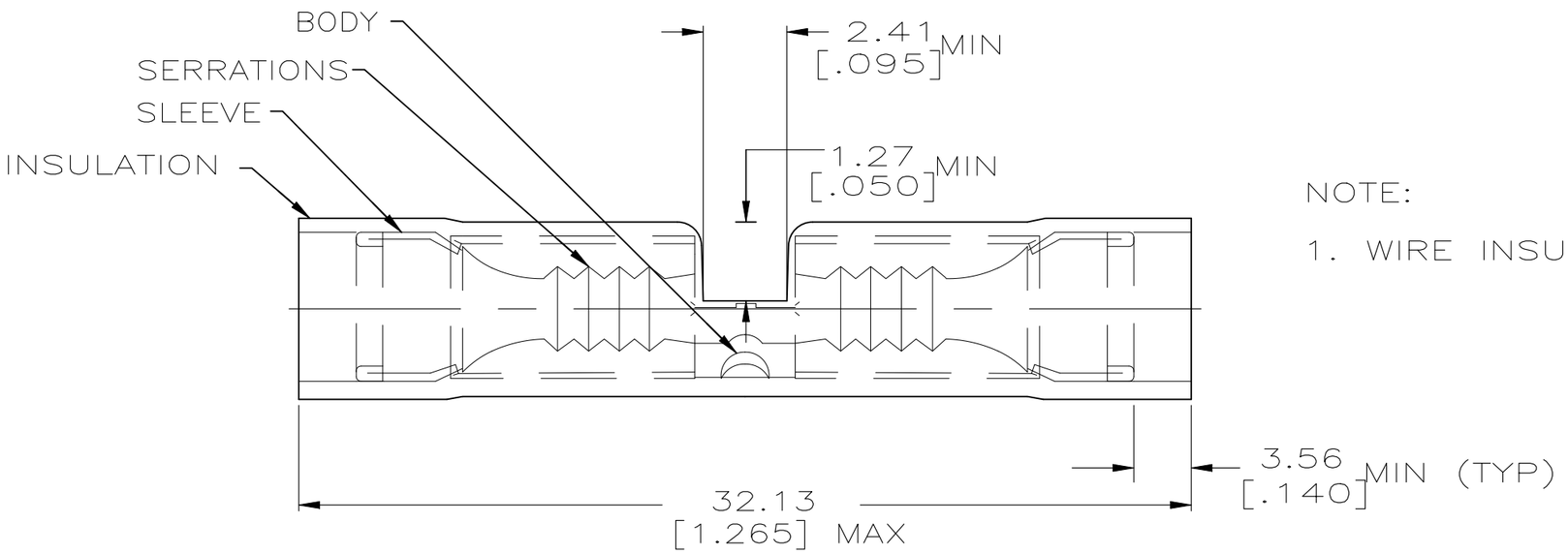

NOTE:

1. WIRE INSULATION DIA 2.67[.105] TO 3.81[.150]

	MILITARY PART NUMBER & CLASS PER SAE AS7928	QTY	PACKAGE TYPE	PART NO.
	–	100	LOOSE PIECE, BOX	8-320562-5
	–	50	LOOSE PIECE, BOX	8-320562-2
PRELIMINARY	–	1 KIT = 100 PIECES	LOOSE PIECE	6-320562-0
	–	2500	ON TAPE	2-320562-3
	M7928/5-4 CLASS 1	50	LOOSE PIECE	320562

AMP INCORPORATED
CUSTOMER SERVICE SYSTEMS

FOR ADDITIONAL PRODUCT INFORMATION OR COPIES OF DRAWINGS AND TECHNICAL DOCUMENTS	PRODUCT INFORMATION CENTER 1-800-522-6752
FOR APPLICATION TOOLING INFORMATION	TOOLING ASSISTANCE CENTER 1-800-722-1111
FOR ORDER ENTRY	1-800-526-5142

THIS DRAWING IS A CONTROLLED DOCUMENT FOR AMP INCORPORATED. IT IS SUBJECT TO CHANGE AND THE CONTROLLING ENGINEERING ORGANIZATION SHOULD BE CONTACTED FOR THE LATEST REVISION.

MAX RECOMMENDED OPERATING TEMPERATURE: 105°C [221°F]

VOLTAGE RATING: 600V MAX (1000V MAX FIXTURE OR SIGN)

CIRCULAR MIL AREA: 1.04-2.62mm² [2,050-5,180]

THIS DRAWING IS A CONTROLLED DOCUMENT.

DIMENSIONS: mm[INCHES]

TOLERANCES UNLESS OTHERWISE SPECIFIED:

0 PLC	± –
1 PLC	± –
2 PLC	± 0.20[.008]
3 PLC	± –
4 PLC	± –
ANGLES	± –

MATERIAL: COPPER PER ASTM B-152 NYLON, COLOR-BLUE

FINISH: TIN PL PER ASTM B-545

DWN	S.S. GOULDEN	9-28-93
CHK	R. HERSEY	9-28-93
APVD	M ELLIS	9-28-93
PRODUCT SPEC	–	
APPLICATION SPEC	–	
WEIGHT	–	

TE Connectivity

NAME: SPLICE, BUTT, P.I.D.G., WIRE SIZE 16-14 –

SIZE	CAGE CODE	DRAWING NO	RESTRICTED TO
A3	00779	C-320562	–

CUSTOMER DRAWING | SCALE NTS | SHEET 1 OF 1 | REV M4

1470-19 (1/15)