THIS DRAWING IS UNPUBLISHED. RELEASED FOR PUBLICATION 20
© COPYRIGHT 20 BY TYCO ELECTRONICS CORPORATION. ALL RIGHTS RESERVED.

LOC	DIST
-	

REVISIONS

P	LTR	DESCRIPTION	DATE	DWN	APVD
	A2	REVISED PER ECR-18-002099	02NOV2018	BW	DC
	B	ECR-19-015552	11NOV2019	KD	FL
	C	ECR-22-135817	1APR2022	DC	FL
	C1	ECR-22-162225	16JAN2023	DC	FL

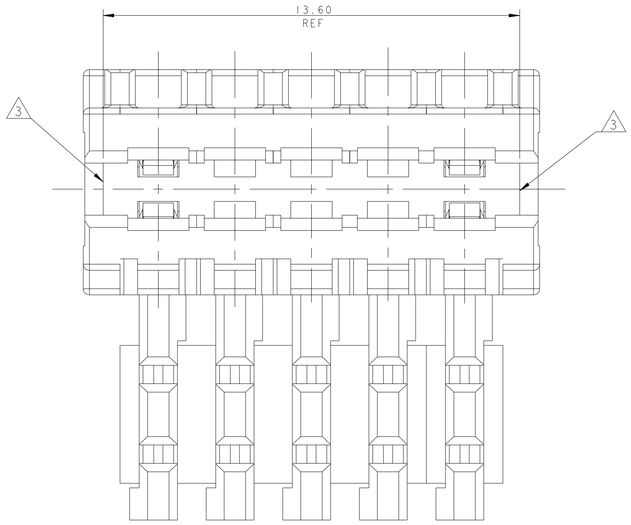

2 PCB SUGGESTED LAYOUT (Soldering side)

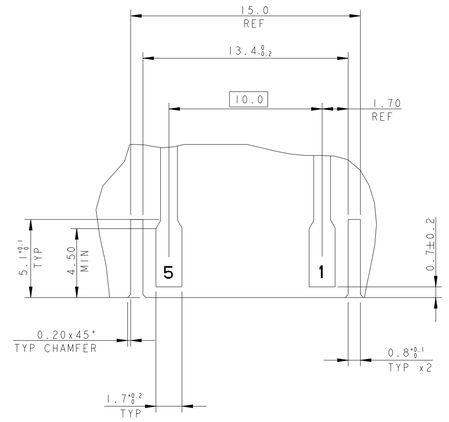

CONNECTION LAYOUT (SCALE 5:1)

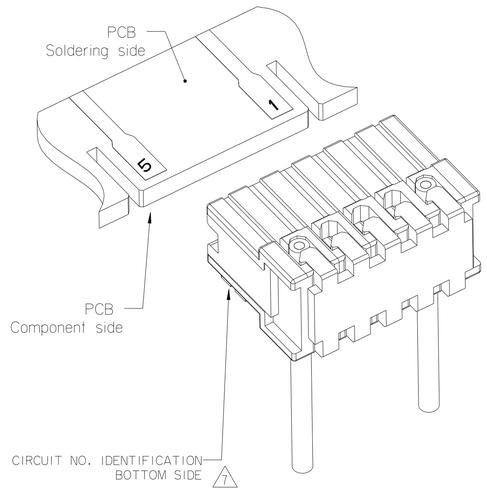

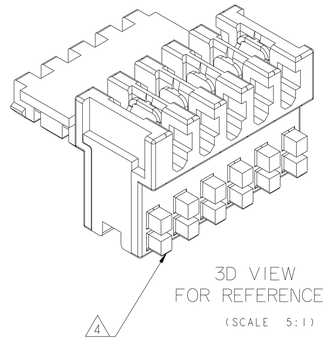

3D VIEW FOR REFERENCE (SCALE 5:1)

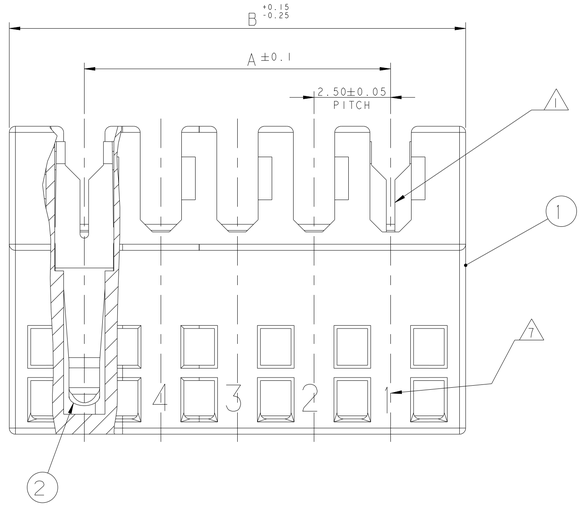

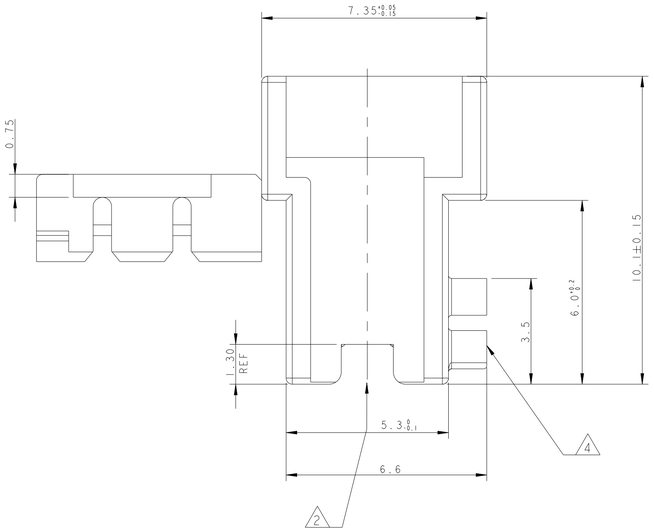

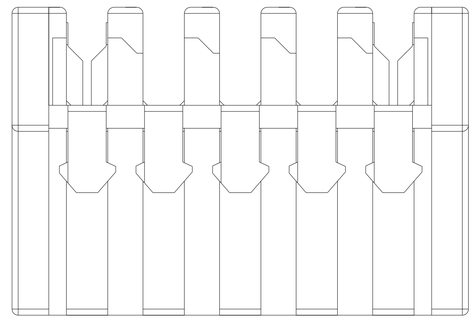

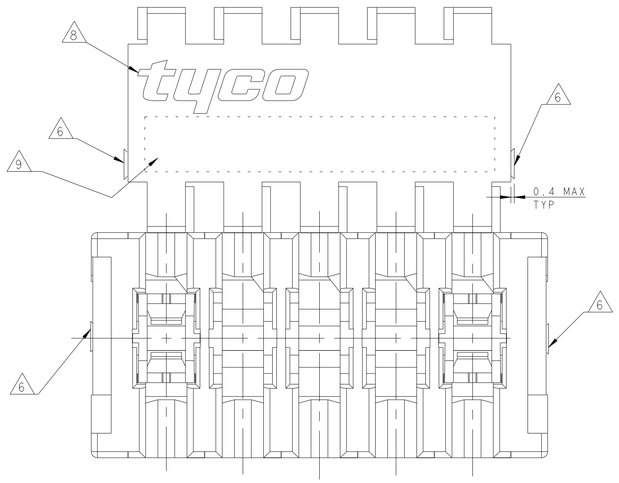

1. WIRE RANGE : STRANDED 0.22-0.35 mm^2 (INS. DIA. 1.30±0.1)
2. MATING PART: PRINTED CIRCUIT BOARD, SINGLE OR DOUBLE SIDED) THK 1.5 mm (COPPER CLADDING INCLUDED), SEE DETAIL FOR PCB LAYOUT
3. EXTERNAL WALL ON BOTH SIDES
4. KEYING RIBS TO BE REMOVED BY TERMINATION MACHINE
5. -
6. CUT OFF DIMENSION DUE TO PRODUCTION PROCESS
7. CIRCUIT No. IDENTIFICATION
8. TYCO ELECTRONICS TRADEMARK (OPTIONAL POSITION)
9. TAMPOGRAPHIC COLOUR CODE AREA (P/Ns IDENTIFICATION BEFORE CRIMPING AREA)
10. PBT GF
11. PA GF, UL94-V0 & GWEPT 750 NO-FLAME, NATURAL

P/N 293249-5 AS SHOWN

COLOUR CODE 9	POLARIZ. RIB POS. 5	HSG POS.	DIM A	DIM B	TE PART NUMBER 10	PART NUMBER 11
BLUE	-	5	10.0	14.9	0-293249-5	7-2311505-5

Q.TY	MATERIAL	DESCRIPTION	ITEM
-	-	-	-
SEE TABLE	PH. BRONZE, TIN PLATED	IDC RECEPTACLE CONTACT	2
	PBT GLASS FIBER FILLED	FEMALE HOUSING	1
1	REVISIONE DELL'ASSEMBLATO (REVISION OF EACH ASSY NO)		
Q.TA' PER ASSEMBLATO (QTY REQ'D PER ASSY)	ELENCO DEI COMPONENTI (PARTS LIST)		

THIS DRAWING IS A CONTROLLED DOCUMENT FOR TYCO ELECTRONICS CORPORATION. IT IS SUBJECT TO MANDATORY REVIEW BY ALL PARTIES TO THE ORGANIZATION SHOULD BE CONTACTED FOR THE LATEST REVISION.

DIMENSIONS: mm

TOLERANCES UNLESS OTHERWISE SPECIFIED:
0 PLC ±
1 PLC ±
2 PLC ±
3 PLC ±
4 PLC ±
ANGLES ±2°
0.2

MATERIAL SEE TABLE
FINISH SEE TABLE

DWN	R. FABRIS	30 OCT 06
CHK	G.TURCO	30 OCT 06
APVD	G.TURCO	30 OCT 06
PRODUCT SPEC	108-20238	
APPLICATION SPEC	114-18049-1	
WEIGHT	-	

NAME: DUOPLUG 2.5 CONNECTOR EXTERNAL WALLS (CTCS SELECTIVELY LOADED)

SIZE	CAGE CODE	DRAWING NO	RESTRICTED TO
A1	00779	C-293249	-

CUSTOMER DRAWING | SCALE | SHEET 1 OF 1 | REV C1