~~THIS DRAWING IS UNPUBLISHED.~~ RELEASED FOR PUBLICATION 2004
© COPYRIGHT 2004 - ALL RIGHTS RESERVED.

LOC	DIST
1	-

REVISIONS

P	LTR	DESCRIPTION	DATE	DWN	APVD
	B3	REVISED PER ECO-11-005301	28MAR2011	RK	HMR
	B4	NEW PNs WITHOUT INTERLEAVE ADDED	20MAY2013	PKS	RRP
	C	PLATING INFO CORRECTED FOR 3- -2	17JUN2013	PKS	RRP
	C1	NEW PNs WITH NEW Q'TY ADDED	08APR2018	DT	TD

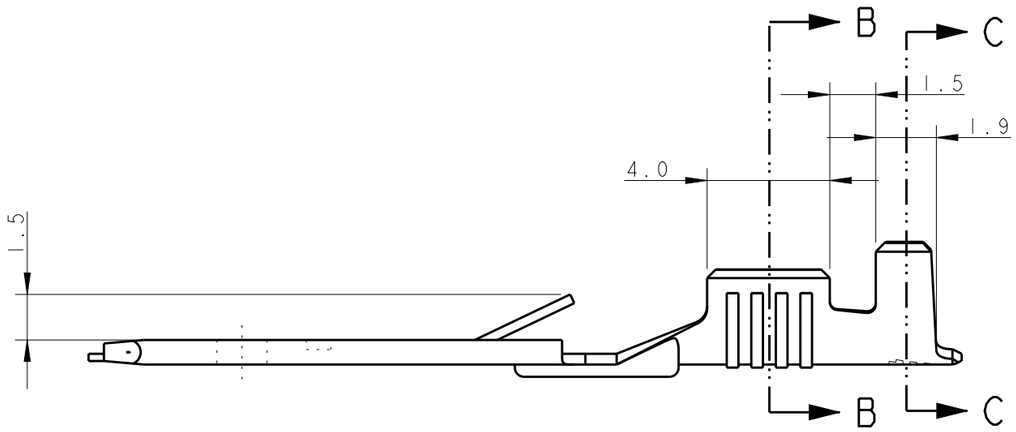

SECTION B-B

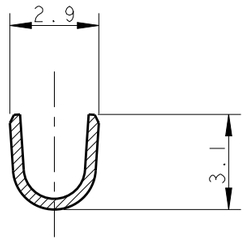

SECTION C-C

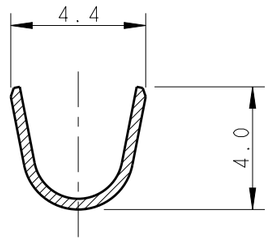

SECTION A-A

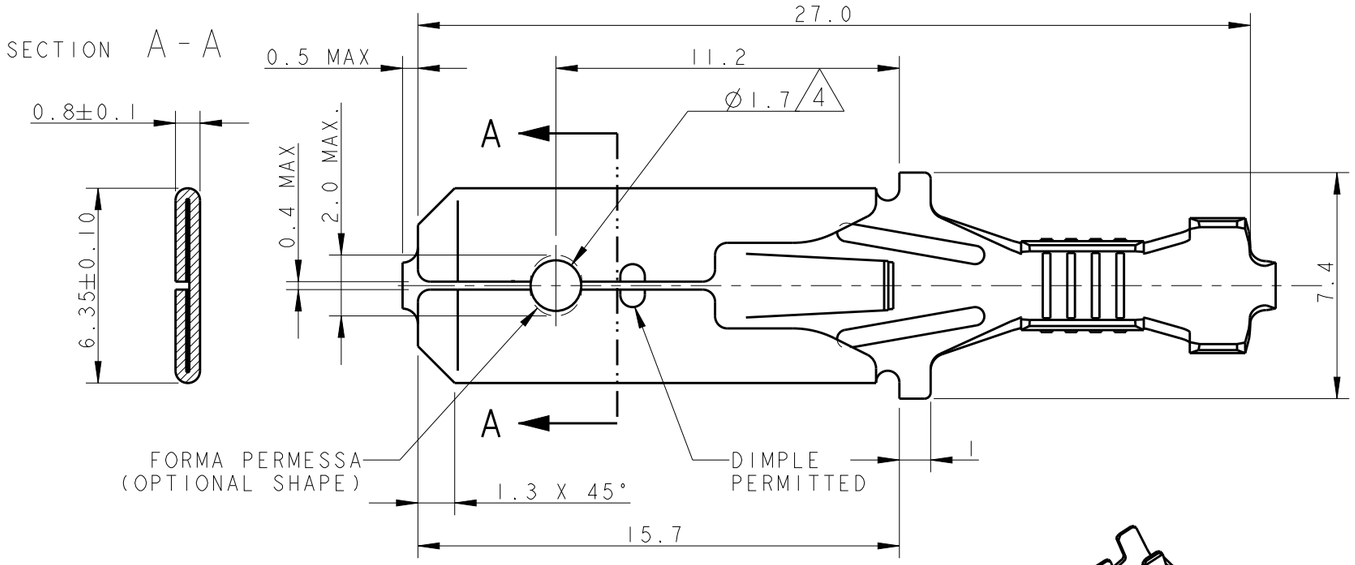

	5	PRE-STAGNATO (PRE-TINNED)	OTTONE (BRASS)	3-293041-2
		NUDO (PLAIN)	OTTONE (BRASS)	3-293041-1
	4 5	PRE-STAGNATO (PRE-TINNED)	OTTONE (BRASS)	2-293041-2
		NUDO (PLAIN)	OTTONE (BRASS)	2-293041-1
6		PRE-STAGNATO (PRE-TINNED)	OTTONE (BRASS)	7-293041-2
		PRE-STAGNATO (PRE-TINNED)	OTTONE (BRASS)	1-293041-2
		NUDO (PLAIN)	OTTONE (BRASS)	1-293041-1
6	4	PRE-STAGNATO (PRE-TINNED)	OTTONE (BRASS)	6-293041-2
6		NUDO (PLAIN)	OTTONE (BRASS)	6-293041-1
		PRE-STAGNATO (PRE-TINNED)	OTTONE (BRASS)	0-293041-2
		NUDO (PLAIN)	OTTONE (BRASS)	0-293041-1
NOTE (NOTES)	VERSIONI (VERSIONS)	FINITURA (FINISH)	MATERIALE (MATERIAL)	NUMERO (TE P/N)

1) STATO DI FORNITURA
(SUPPLY CONDITION, Scala 1:1)

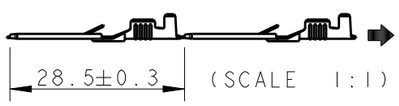

(SCALE 1:1)

SENSO DI USCITA DEL TERMINALE DALLA BOBINA (DIRECTION OFF TOP OF REEL)

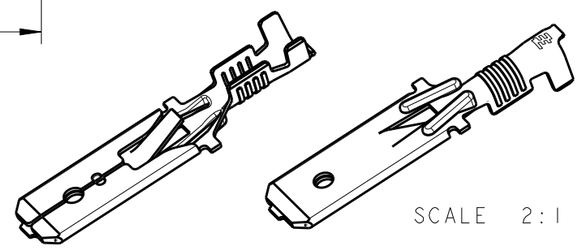

SCALE 2:1

2) BOBINATO SU BOBINA 12" CON CARTA INTERPOSTA (REELED ON 12" CARTON TYPE REEL WITH INTERLEAVE PAPER STRIP)

3) SPLICING STRIP PRODUCT BY SPOT WELDING PERMITTED

4 VERSIONI CON FORO (VERSION WITH HOLE)

5 REELED WITHOUT INTERLEAVE PAPER

6 NEW PNs WITH NEW Q'TY ADDED

DIAM. ISOLANTE (INS. DIA. RANGE) Ø2.3 mm MAX

RANGO FILO (WIRE RANGE) 0.35-1.00 mm²

THIS DRAWING IS A CONTROLLED DOCUMENT.

DIMENSIONS: mm

TOLERANCES UNLESS OTHERWISE SPECIFIED:

0 PLC	±-
1 PLC	±0.3
2 PLC	±-
3 PLC	±-
4 PLC	±-
ANGLES	±2°

MATERIAL SEE TABLE

FINISH SEE TABLE

DWN H. Yaali 04 JUL 2005
CHK G. Turco -
APVD -
PRODUCT SPEC 108-20020
APPLICATION SPEC 114-20119
WEIGHT -

TE Connectivity

NAME FASTIN-FASTON Connector, 6.3 mm SR. TAB CONTACT

SIZE	CAGE CODE	DRAWING NO	RESTRICTED TO
A3	00779	C-293041	-

Customer Drawing | SCALE 5:1 | SHEET 1 OF 1 | REV C1