THIS DRAWING IS UNPUBLISHED.
QUESTO DISEGNO NON DEVE ESSERE DIVULGATO O RIPRODOTTO

RELEASED FOR PUBLICATION ,19 .
E' CONSENTITA LA DIVULGAZIONE

© COPYRIGHT 19 BY AMP INCORPORATED. ALL RIGHTS RESERVED.
TUTTI I DIRITTI SONO RISERVATI

| LOC | DIST |
|---|---|
| 1 | |

REVISIONS
REVISIONI

| P | LTR REV | DESCRIPTION DESCRIZIONE | DATE DATA | DWN DIS. | APVD APP. |
|---|---|---|---|---|---|
| | A2 | REVISED PER ET00-0238-01 | 08OCT01 | M.G. | O.C. |
| | A3 | UPDATED (ET00-0061-04) | 05APR04 | F.A. | O.C. |
| | B | IMPROVED LOCKING ECR-07-002234 | 30MAR2007 | M.S. | O.C. |
| | B1 | ECN-24-290803 | 28OCT2024 | RG | VN |

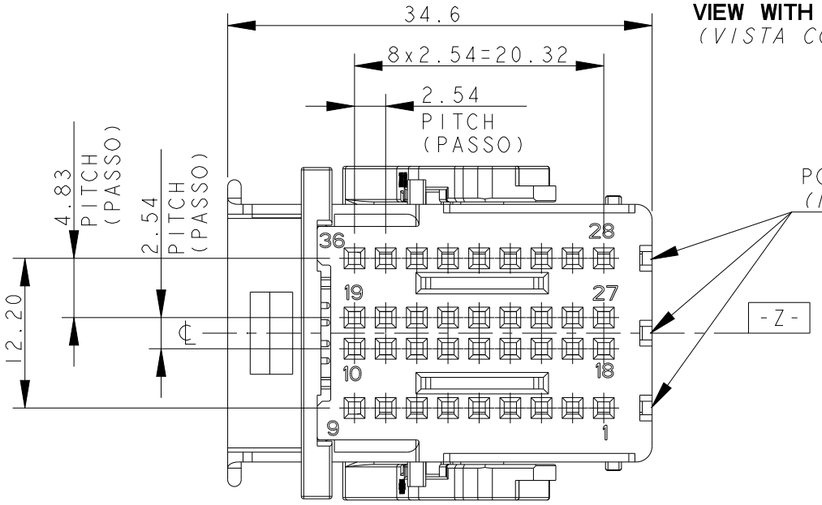


**VIEW WITH RETAINER**
*(VISTA CON PIASTRINA D'ARRESTO MONTATA)*

POLARIZATION RIBS
*(NERVATURE DI POLARIZZAZIONE)*

**VIEW WITH RETAINER**
*(VISTA CON PIASTRINA D'ARRESTO MONTATA)*

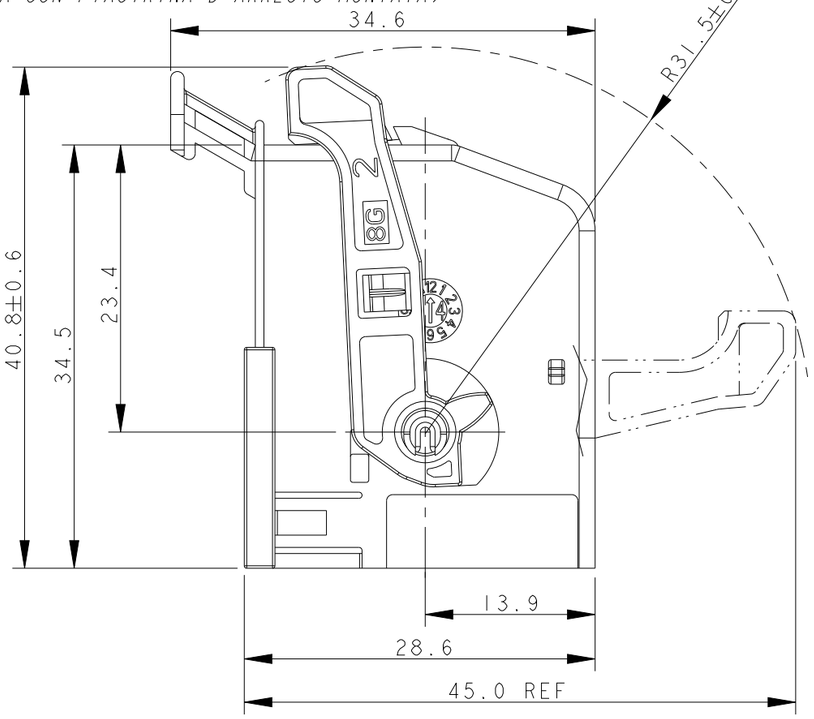


**VIEW WITHOUT RETAINER**
*(VISTA SENZA PIASTRINA D'ARRESTO MONTATA)*

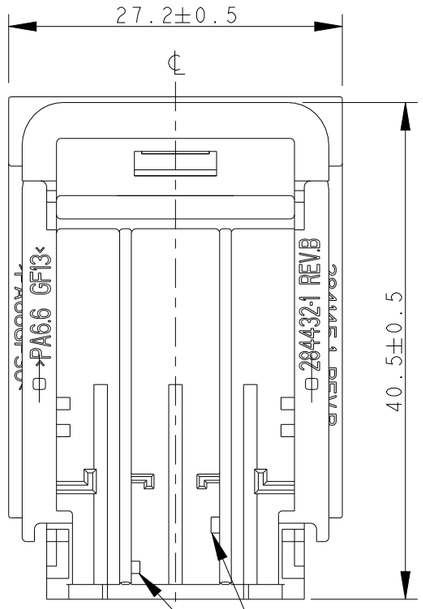


POLARIZATION KEYS
*(CHIAVI DI POLARIZZAZIONE)*

**CAVITY SUITABLE FOR MQS CRIMP MODULE P/N 284134-5**
*(CAVITA' ADATTA PER MODULO CRIMP MQS P/N 284134-5)*

**CAVITY SUITABLE FOR MQS CRIMP MODULE P/N 284134-6**
*(CAVITA' ADATTA PER MODULO CRIMP MQS P/N 284134-6)*

**CAVITY SUITABLE FOR MQS CRIMP MODULE P/N 953599-1**
*(CAVITA' ADATTA PER MODULO CRIMP MQS P/N 953599-1)*

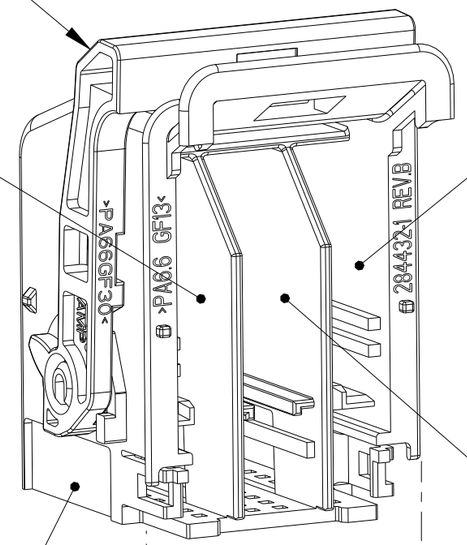


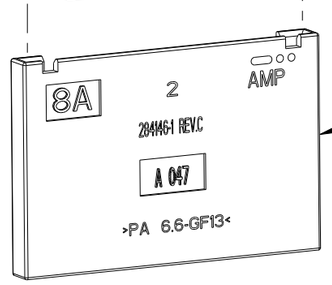


**OBSOLETE**

1) THE FRAME IS SUPPLIED WITH LEVER IN CLOSED POSITION AND RETAINER NOT ASSEMBLED
*(LA CORAZZA E' FORNITA CON LEVA IN POSIZIONE CHIUSA E PIASTRINA D'ARRESTO NON MONTATA)*
2) SUITABLE FOR MATING WITH HEADERS P/Ns 284520-1, 284317-1 AND 284317-2
*(ADATTO PER ACCOPPIAMENTO SU HEADERS P/N 284520-1, 284317-1 E 284317-2)*

## P/N 284438-1 AS SHOWN
*(P/N 284438-1 COME INDICATO)*

| ITEM | DESCRIPTION (DESCRIZIONE) | MATERIAL (MATERIALE) | COLOUR (COLORE) | Q.TY (Q.TA') |
|---|---|---|---|---|
| 1 | SHELL 36 POS. (CORAZZA 36 VIE) | PA6.6-G.F. | BLUE (BLU) | 1 |
| 2 | LEVER (LEVA) | PA6.6-G.F. | RED (ROSSO) | 1 |
| 3 | RETAINER (PIASTRINA D'ARRESTO) | PA6.6-G.F. | BLACK (NERO) | 1 |

AMP 1470-19 REV 09MAY94

THIS DRAWING IS A CONTROLLED DOCUMENT FOR AMP INCORPORATED. IT IS SUBJECT TO CHANGE AND THE CONTROLLING ENGINEERING ORGANIZATION SHOULD BE CONTACTED FOR THE LATEST REVISION. QUESTO DISEGNO È UN DOCUMENTO DI PROPRIETÀ E RESPONSABILITÀ DELL' AMP INCORPORATED. E' SOGGETTO A VARIAZIONI. PER OTTENERE L'ULTIMA REVISIONE DEL DISEGNO CONTATTARE L'UFFICIO TECNICO RESPONSABILE.

DIMENSIONS: DIMENSIONI: mm

TOLERANCES UNLESS OTHERWISE SPECIFIED: TOLLERANZE: SE NON DIVERSAMENTE SPECIFICATO
0 PLC/DEC ±0.3
1 PLC/DEC ±0.3
2 PLC/DEC ±0.3
3 PLC/DEC ±
4 PLC/DEC ±
ANGLES/ANGOLI ±2°

MATERIAL MATERIALE: SEE TABLE (VED. TABELLA)
FINISH FINITURA: SEE TABLE (VED. TABELLA)

DWN/DIS. 29MAR2000 F.CRESSEVICH
CHK/CONT. 29MAR2000 O.CANUTO
APVD/APP. 29MAR2000 A.GENTA
PRODUCT SPEC SPEC DI PRODOTTO
APPLICATION SPEC SPEC DI APPLICAZIONE
WEIGHT PESO

AMP Italia S.p.A.
C.so F.lli Cervi 15 Collegno (TO)

NAME NOME: 36 POS. FRAME ASS'Y CRIMP 2.54 mm PITCH (CORAZZA)

SIZE: A3
CAGE CODE: 00779
DRAWING NO NUMERO: C-284438

CUSTOMER DRAWING
DISEGNO PER CLIENTE SOLO PER RIFERIMENTO

SCALE SCALA 2:1 SHEET FOGLIO 1 OF DI 2 REV B1

THIS DRAWING IS UNPUBLISHED. RELEASED FOR PUBLICATION ,19 .
© COPYRIGHT 19 BY AMP INCORPORATED. ALL RIGHTS RESERVED.

| LOC | DIST |
|---|---|
| 1 | - |

REVISIONS

| P | LTR | DESCRIPTION | DATE | DWN | APVD |
|---|---|---|---|---|---|
| rev_sym_1 | | rev_desc_1 | rev_date_1 | rev_dwn_1 | rev_appr_1 |
| rev_sym_2 | | rev_desc_2 | rev_date_2 | rev_dwn_2 | rev_appr_2 |
| rev_sym_3 | | rev_desc_3 | rev_date_3 | rev_dwn_3 | rev_appr_3 |
| rev_sym_4 | | rev_desc_4 | rev_date_4 | rev_dwn_4 | rev_appr_4 |

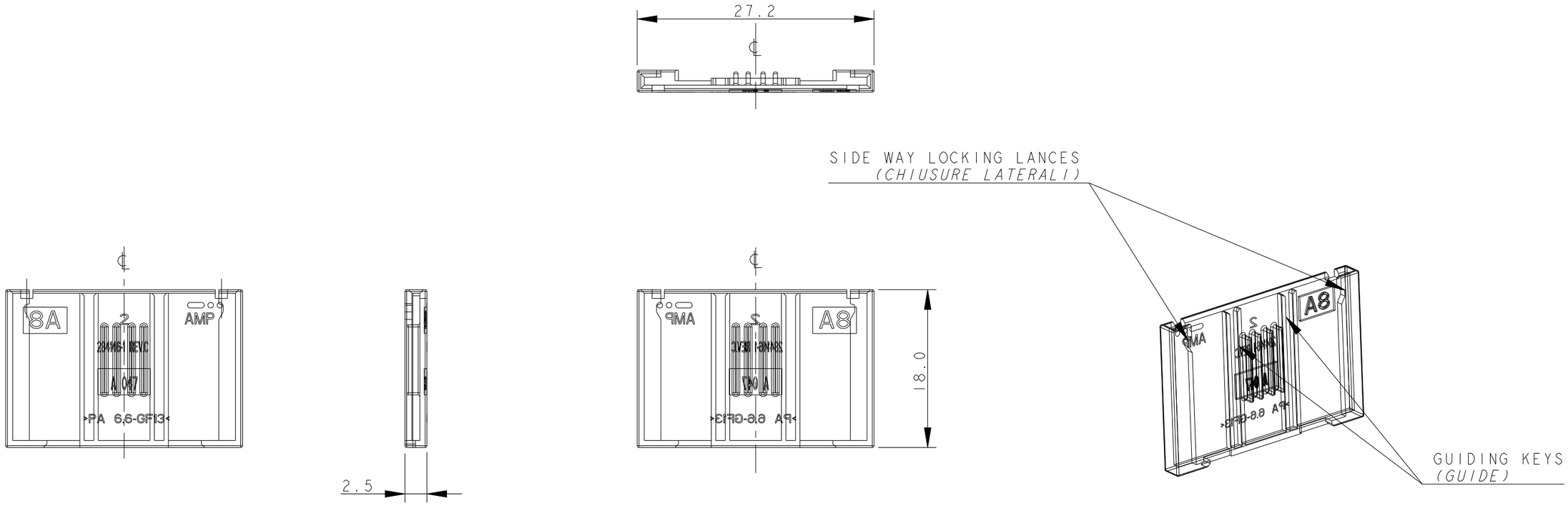


OBSOLETE

THIS DRAWING IS A CONTROLLED DOCUMENT FOR AMP INCORPORATED. IT IS SUBJECT TO CHANGE AND THE CONTROLLING ENGINEERING ORGANIZATION SHOULD BE CONTACTED FOR THE LATEST REVISION.

DIMENSIONS: mm

TOLERANCES UNLESS OTHERWISE SPECIFIED:

| | |
|---|---|
| 0 PLC | ±0.3 |
| 1 PLC | ±0.3 |
| 2 PLC | ±0.3 |
| 3 PLC | ±- |
| 4 PLC | ±- |
| ANGLES | ±2° |

MATERIAL - SEE SHEET 1/2 (VED. FOGLIO 1/2)

FINISH - SEE SHEET 1/2 (VED. FOGLIO 1/2)

DWN 29MAR2000 F.CRESSEVICH
CHK 29MAR2000 O.CANUTO
APVD 29MAR2000 A.GENTA
PRODUCT SPEC SEE SHEET 1/2 -(VED. FOGLIO 1/2)
APPLICATION SPEC SEE SHEET 1/2 -(VED. FOGLIO 1/2)
WEIGHT -

CUSTOMER DRAWING

AMP

AMP Italia S.p.A.
C.so F.lli Cervi 15 Collegno (TO)

NAME
36 POS. FRAME ASS'Y CRIMP
2.54 mm PITCH - RETAINER
(PIASTRINA D'ARRESTO)

| SIZE | CAGE CODE | DRAWING NO |
|---|---|---|
| A3 | 00779 | C-284438 |

SCALE 2:1 SHEET 2 OF 2 REV B1