© 2019 TE Connectivity. All Rights Reserved.

REVISIONS					
P	LTR	DESCRIPTION	DATE	DWN	APVD
	A	RELEASE TO PRODUCTION	09DEC2019	AY	PS
	A1	18 POSITION ADDED	13MAY2021	AY	PS

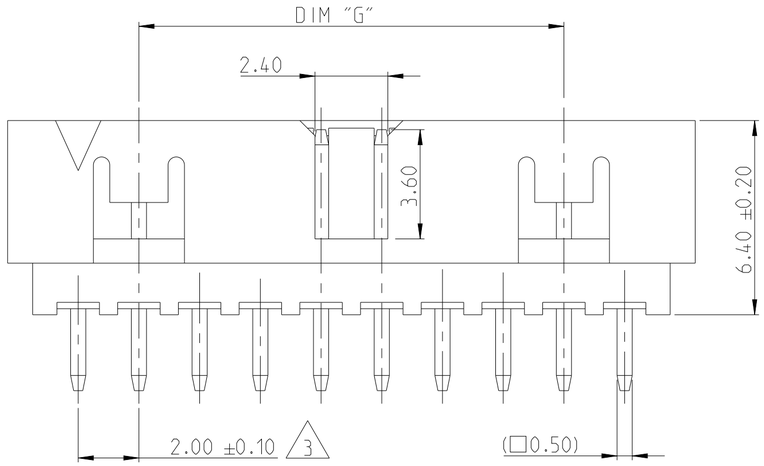

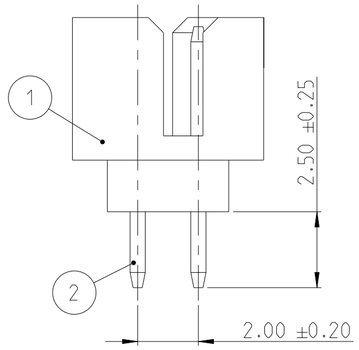

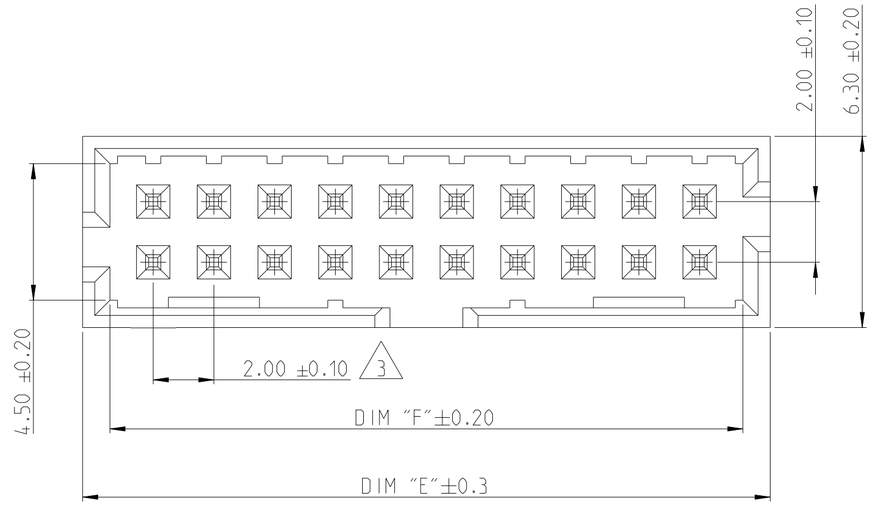

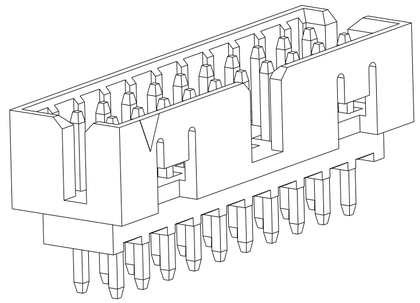

NOTES:

1. MATERIAL
   HOUSING : HIGH TEMPERATURE THERMOPLASTIC, UL94-V0; COLOR- BLACK
   POST : COPPER ALLOY
   FINISH :
   MATING SIDE: MIN. 0.76 µm GOLD OVER NICKEL UNDER PLATING.
   SOLDER SIDE: MIN. 2.0 µm TIN OVER NICKEL UNDER PLATING.
2. PACKAGING: TUBE
3. TOLERANCE NOT CUMULATIVE.

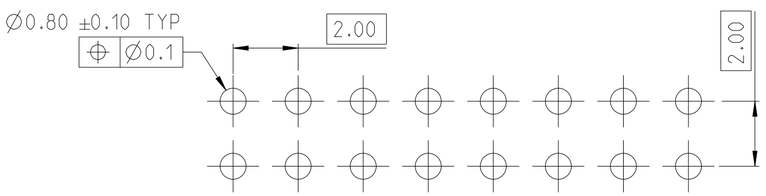

RECOMMMENDED PCB HOLE PATTERN FOR THROUGH HOLE WAVE

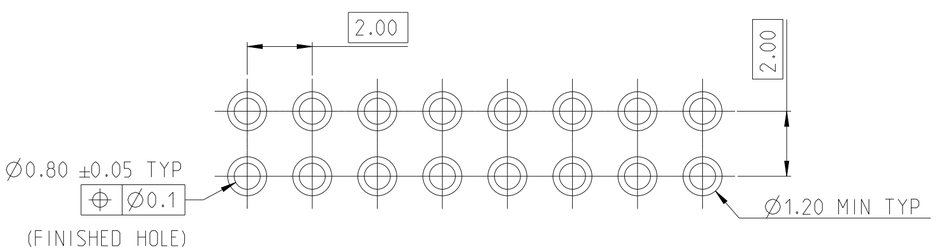

RECOMMMENDED PCB HOLE PATTERN FOR THROUGH HOLE REFLOW/PIN-IN-PASTE

2-2842238-0 AS SHOWN

DIM "G"	DIM "F"	DIM "E"	POS.	TE PN.
44	50.85	52.65	50	5-2842238-0
38	44.85	46.65	44	4-2842238-4
34	40.85	42.65	40	4-2842238-0
28	34.85	36.65	34	3-2842238-4
24	30.85	32.65	30	3-2842238-0
20	26.85	28.65	26	2-2842238-6
18	24.85	26.65	24	2-2842238-4
14	20.85	22.65	20	2-2842238-0
12	18.85	20.65	18	1-2842238-8
10	16.85	18.65	16	1-2842238-6
8	14.85	16.65	14	1-2842238-4

DESCRIPTION	ITEM NO.
CONTACT PIN	2
HOUSING	1

THIS DRAWING IS A CONTROLLED DOCUMENT.

DIMENSIONS: mm

TOLERANCES UNLESS OTHERWISE SPECIFIED:
0 PLC ±-
1 PLC ±-
2 PLC ±0.25
3 PLC ±-
4 PLC ±-
ANGLES ±2°

MATERIAL: SEE NOTES -
FINISH: - -

DWN ANKIT YADAV 12NOV2019
CHK KARTHIK JK. 25NOV2019
APVD PRASHANTH S. 27NOV2019
PRODUCT SPEC 108-64040
APPLICATION SPEC 114-32259
WEIGHT -

CUSTOMER DRAWING

TE Connectivity

NAME: AMPMODU 2mm SHROUDED HEADER, DUAL ROW, VERTICAL TH, 0.76 Au, TUBE
-

SIZE	CAGE CODE	DRAWING NO	RESTRICTED TO
A2	00779	C-2842238	-

SCALE 5:1 SHEET 1 OF 1 REV A1

1471-9 (3/13)