© 2019 TE Connectivity. All Rights Reserved.

REVISIONS					
P	LTR	DESCRIPTION	DATE	DWN	APVD
	A	RELEASE TO PRODUCTION	27AUG2019	AY	PS
	A1	REMOVED TOLERANCE FROM DIM F	17DEC2019	AY	PS

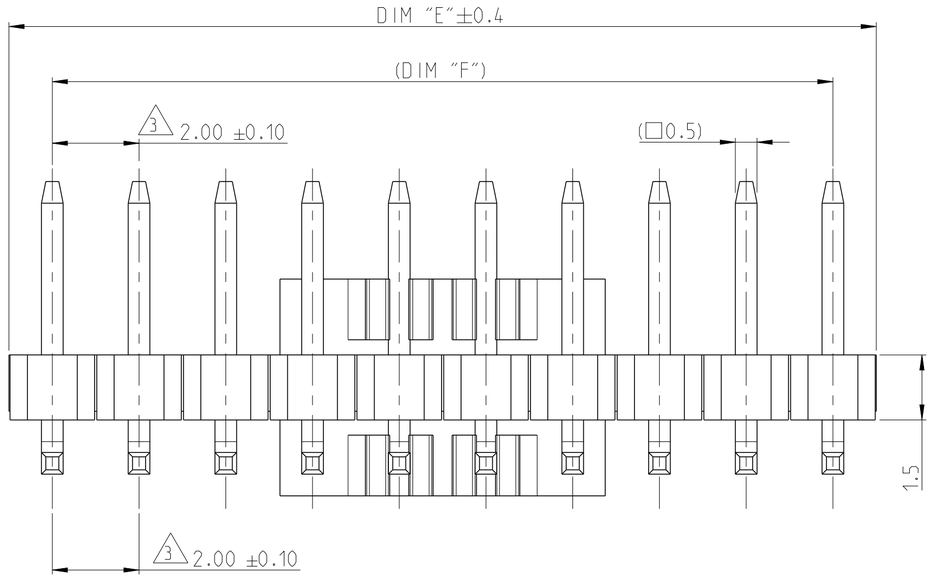

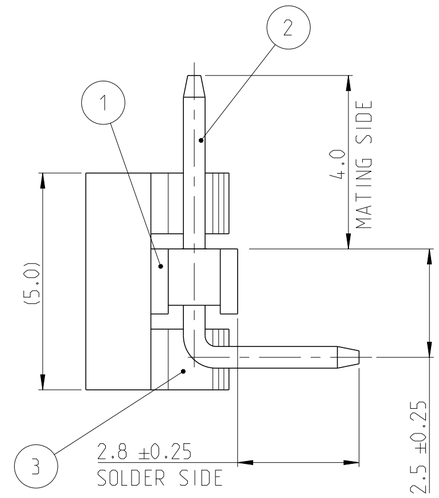

NOTES:

1. MATERIAL
   HOUSING & P&P CAP : HIGH TEMPERATURE THERMOPLASTIC, UL94-V0; COLOR- BLACK
   CONTACT PIN : COPPER ALLOY
   FINISH :
   MATING SIDE: MIN. 0.38 µm GOLD OVER NICKEL UNDER PLATING.
   SOLDER SIDE: MIN. 2.0 µm BRIGHT TIN OVER NICKEL UNDER PLATING.
2. PACKAGING: TAPE AND REEL (WITH PICK AND PLACE CAP).
3. TOLERANCE NOT CUMULATIVE.
4. CUTTING BURR MAX. 0.25 mm.

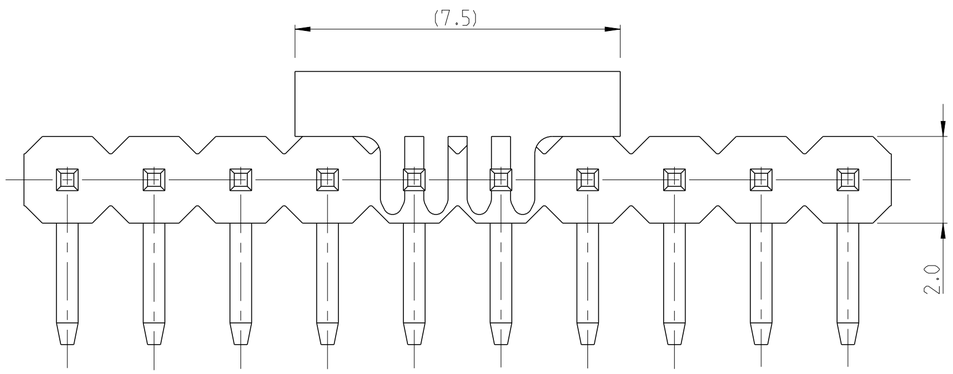

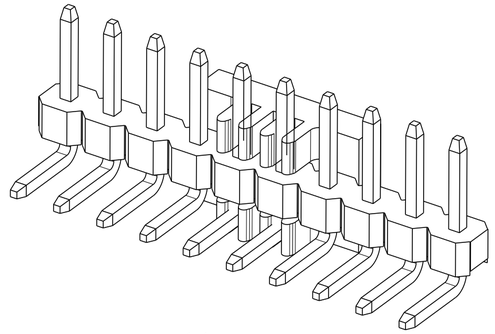

6:1

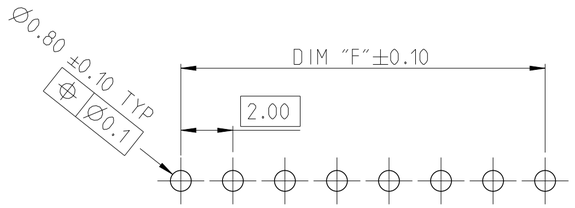

RECOMMENDED PCB HOLE PATTERN FOR THROUGH HOLE WAVE

1-2842119-0 AS SHOWN

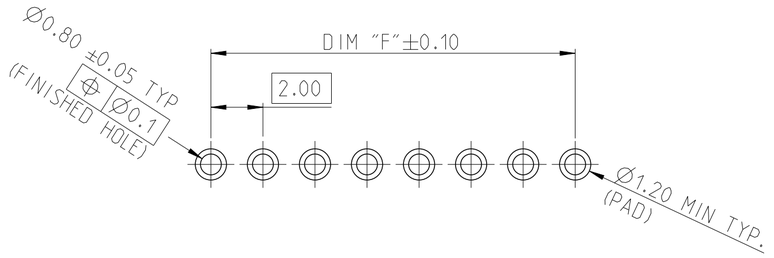

RECOMMENDED PCB HOLE PATTERN FOR THROUGH HOLE REFLOW/PIN-IN-PASTE

DIM "F"	DIM "E"	POS	TE PN
48.0	50.0	25	2-2842119-5
46.0	48.0	24	2-2842119-4
44.0	46.0	23	2-2842119-3
42.0	44.0	22	2-2842119-2
40.0	42.0	21	2-2842119-1
38.0	40.0	20	2-2842119-0
36.0	38.0	19	1-2842119-9
34.0	36.0	18	1-2842119-8
32.0	34.0	17	1-2842119-7
30.0	32.0	16	1-2842119-6
28.0	30.0	15	1-2842119-5
26.0	28.0	14	1-2842119-4
24.0	26.0	13	1-2842119-3
22.0	24.0	12	1-2842119-2
20.0	22.0	11	1-2842119-1
18.0	20.0	10	1-2842119-0
16.0	18.0	9	2842119-9
14.0	16.0	8	2842119-8
12.0	14.0	7	2842119-7
10.0	12.0	6	2842119-6
8.0	10.0	5	2842119-5
6.0	8.0	4	2842119-4
4.0	6.0	3	2842119-3
2.0	4.0	2	2842119-2

DESCRIPTION	ITEM NO.
PICK AND PLACE CAP	3
CONTACT PIN	2
HOUSING	1

THIS DRAWING IS A CONTROLLED DOCUMENT.

DIMENSIONS: mm

TOLERANCES UNLESS OTHERWISE SPECIFIED:
0 PLC ±-
1 PLC ±0.2
2 PLC ±0.15
3 PLC ±-
4 PLC ±-
ANGLES ±2°

MATERIAL: SEE NOTES
FINISH: -

DWN 01AUG2019 ANKIT YADAV
CHK 14AUG2019 KARTHIK JK
APVD 16AUG2019 PRASHANTH S
PRODUCT SPEC 108-64040
APPLICATION SPEC 114-32259
WEIGHT -

TE Connectivity

NAME: AMPMODU 2mm BREAKAWAY HEADER, SINGLE ROW, RIGHT ANGLE, 0.38 Au, T/R, PICK AND PLACE CAP

SIZE A2 | CAGE CODE 00779 | DRAWING NO C-2842119 | RESTRICTED TO -

CUSTOMER DRAWING | SCALE 5:1 | SHEET 1 OF 1 | REV A1