USED ON –

DWG NO 2834111

THIS DRAWING IS A CONTROLLED DOCUMENT

NOTES :

1. MATERIALS AND FINISH:
   - HOUSING: PA66
   - CONTACTS: BRASS, FINISH: TIN OVER NICKEL UNDERPLATE
2. MUST COMPLY WITH DIRECTIVE 2002/95/EC (RoHS)
3. WIRE TYPES AND SIZES ACCEPTED
   WIRE RANGE: 16AWG~22AWG.
   STRIP LENGTH: 5mm
4. KEY CHARACTERISTIC PER 407-55..
   PITCH DIMENSION 5.08+/-0.1&10.16+/-0.2 NEED TO MEATURE THE POSITONON THE CONTACT ROOT
5. SUPPLIER: DECA

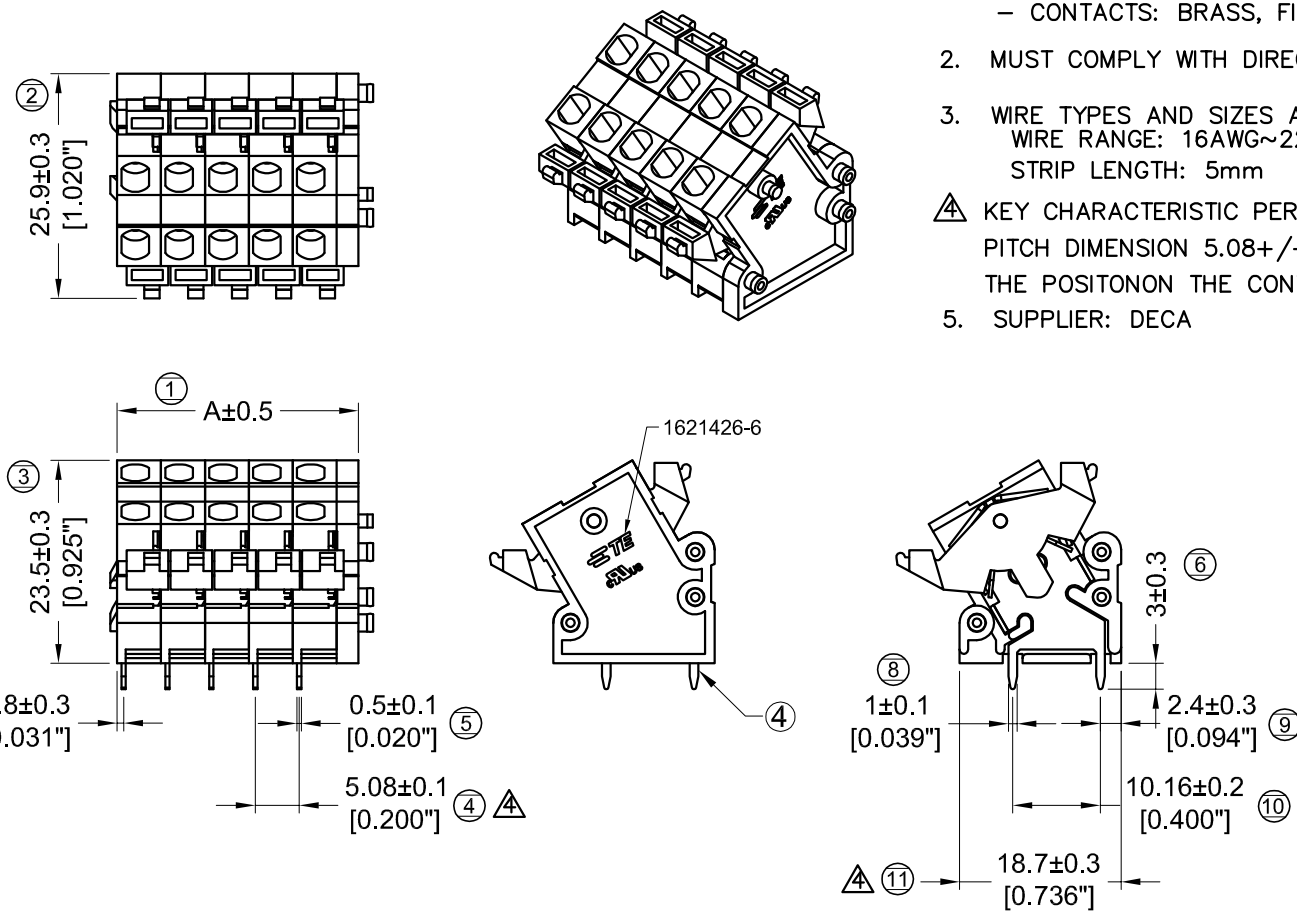

GRAY	43.18	8 POSN	2834111-7
	38.10	7 POSN	2834111-6
	33.02	6 POSN	2834111-5
	27.94	5 POSN	2834111-4
	22.86	4 POSN	2834111-3
	17.78	3 POSN	2834111-2
	12.70	2 POSN	2834111-1
COLOR	A	NO. OF POSITIONS	PART NO

DWN GEORGE FU 23NOV2015	MATERIAL 1	HEAT TREAT –	
CHK SHI MING 23NOV2015	TE Connectivity		
APVD XU XIANG 23NOV2015			
NAME 5.08mm 45° Entry Screwless Connector			
SCALE 1:1	SIZE A2	DRAWING NO 2834111	SHEET 1 OF 1	REV A

DIMENSIONS: mm

TOLERANCES UNLESS OTHERWISE SPECIFIED: 0 PLC ±, 1 PLC ±, 2 PLC ±, 3 PLC ±, 4 PLC ±

ANGLES ±0°

SURFACE TEXTURE √

P	LTR	REVISION RECORD	DATE	DWN	APVD
	A	FIRST REVISION	23NOV2015	G.F	S.M

LOC –

DIST –

3307-7 (3/11)

THIS INFORMATION IS CONFIDENTIAL AND PROPRIETARY TO TYCO ELECTRONICS CORPORATION AND ITS WORLDWIDE SUBSIDIARIES AND AFFILIATES (TE). IT MAY NOT BE DISCLOSED TO ANYONE, OTHER THAN TE PERSONNEL, WITHOUT AUTHORIZATION FROM TE (www.TE.com).