THIS DRAWING IS UNPUBLISHED. RELEASED FOR PUBLICATION 20
© COPYRIGHT 20 - ALL RIGHTS RESERVED.

LOC	DIST
FT	0

REVISIONS

P	LTR	DESCRIPTION	DATE	DWN	APVD
	D2	REVISED PER ECO-12-007964	02MAY2012	KH	MS
	D3	REVISED PER ECO-22-177495	30SEPT2022	SM	PS

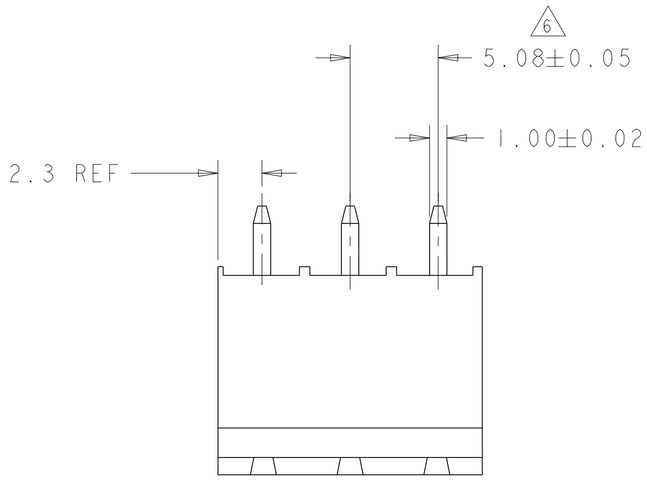

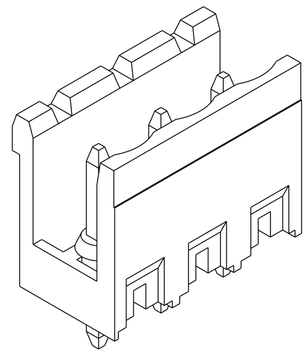

282825-3 AS SHOWN

1. MATERIALS AND FINISH}
   HOUSING: PA 6-6, UL 94-V0, COLOR GREEN.
   TERMINAL: COPPER ALLOY, FINISH: SEE TABLE.
2. SUITABLE FOR 1,6-2,4mm PC BOARD THICKNESS.
3. END-TO-END STACKABLE WITHOUT LOSS OF CENTERLINE SPACING.
4. RECOGNIZED UNDER THE COMPONENT PROGRAM OF UNDERWRITERS LABORATORIES INC. FILE N°E60677.
5. IMQ CERTIFICATE WITH SURVEILLANCE IN CONFORMITY WITH IEC 998-1/998-2-1.
6. NOT CUMULATIVE TOLERANCE.

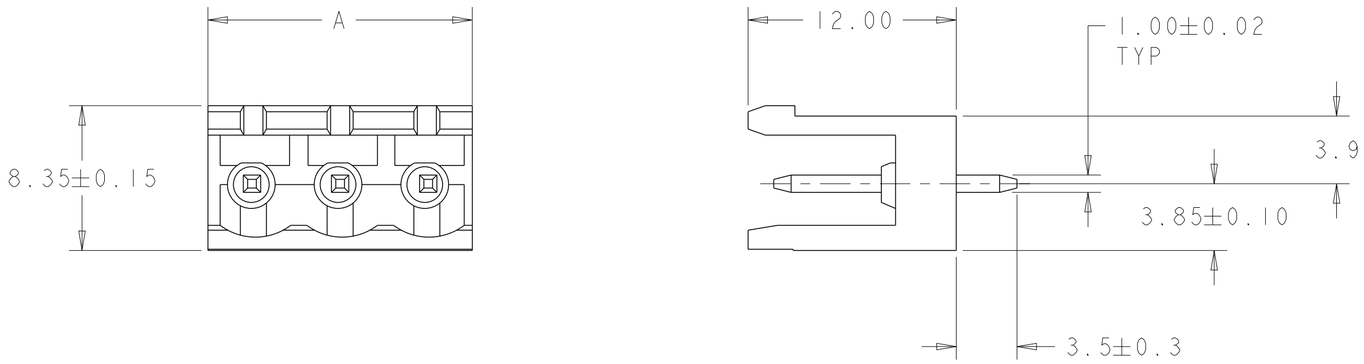

TERMINAL FINISH	A	NO OF POSN	PART NUMBER
.000008 GOLD OVER NICKEL	9.68	2	2-282825-6
TIN PLATED	126.52	25	2-282825-5
TIN PLATED	121.44	24	2-282825-4
TIN PLATED	116.36	23	2-282825-3
TIN PLATED	111.28	22	2-282825-2
TIN PLATED	106.20	21	2-282825-1
TIN PLATED	101.12	20	2-282825-0
TIN PLATED	96.04	19	1-282825-9
TIN PLATED	90.96	18	1-282825-8
TIN PLATED	85.88	17	1-282825-7
TIN PLATED	80.80	16	1-282825-6
TIN PLATED	75.72	15	1-282825-5
TIN PLATED	70.64	14	1-282825-4
TIN PLATED	65.56	13	1-282825-3
TIN PLATED	60.48	12	1-282825-2
TIN PLATED	55.40	11	1-282825-1
TIN PLATED	50.32	10	1-282825-0
TIN PLATED	45.24	9	282825-9
TIN PLATED	40.16	8	282825-8
TIN PLATED	35.08	7	282825-7
TIN PLATED	30.00	6	282825-6
TIN PLATED	24.92	5	282825-5
TIN PLATED	19.84	4	282825-4
TIN PLATED	14.76	3	282825-3
TIN PLATED	9.68	2	282825-2

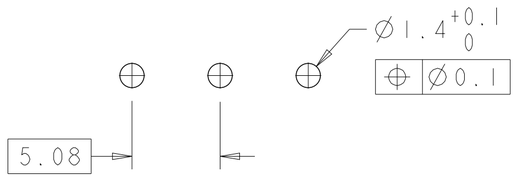

RECOMMENDED PC BOARD LAYOUT

THIS DRAWING IS A CONTROLLED DOCUMENT.

DIMENSIONS: mm

TOLERANCES UNLESS OTHERWISE SPECIFIED:
0 PLC ±-
1 PLC ±.3
2 PLC ±.25
3 PLC ±-
4 PLC ±-
ANGLES ±2

MATERIAL 1

FINISH 1

DWN 30JUL2001 E. ZANOLINI
CHK 30JUL2001 D. BIEVENOUR
APVD 30JUL2001 D. BEIVENOUR
PRODUCT SPEC 108-20166
APPLICATION SPEC 114-20079
WEIGHT -

TE Connectivity

NAME TERMINAL BLOCK HEADER ASSEMBLY 180 DEG OPEN ENDS, STACKING 5.08mm PITCH

SIZE A2 | CAGE CODE 00779 | DRAWING NO C-282825 | RESTRICTED TO

CUSTOMER DRAWING | SCALE 3:1 | SHEET 1 OF 1 | REV D3