© 2023 TE Connectivity. All Rights Reserved.

REVISIONS					
P	LTR	DESCRIPTION	DATE	DWN	APVD
	U	REDRAWN, RESIN SUPPLIER CHANGED	04JUN2021	SB	KJK
	V	PLATING CHANGED FROM BRIGHT TO MATTE TIN	06DEC2023	SP	KJK
	W	PLATING THICKNESS OPTIMIZATION	09OCT2024	SN	KJK

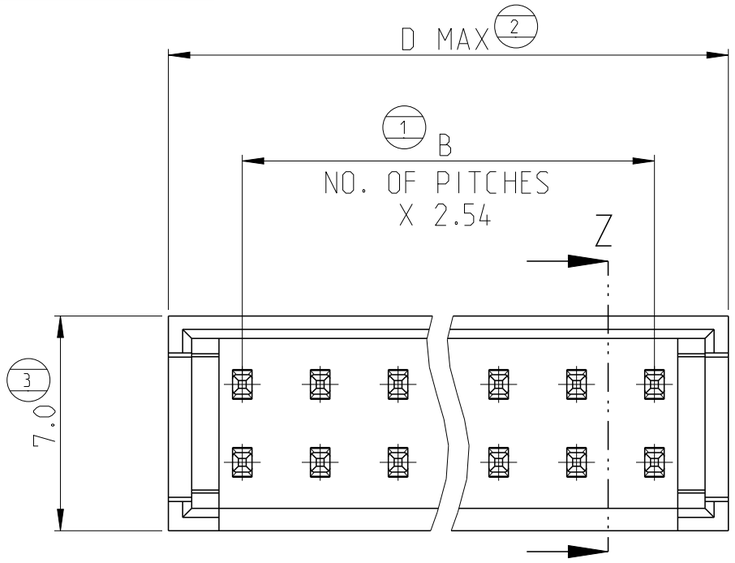

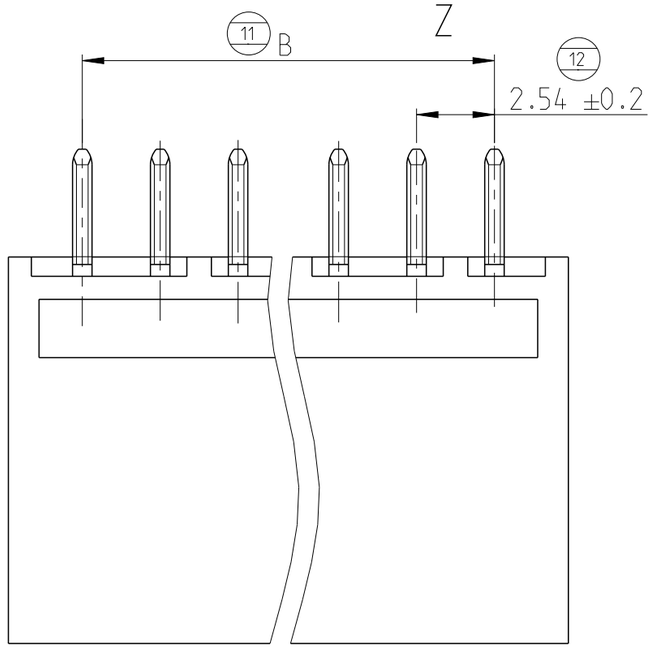

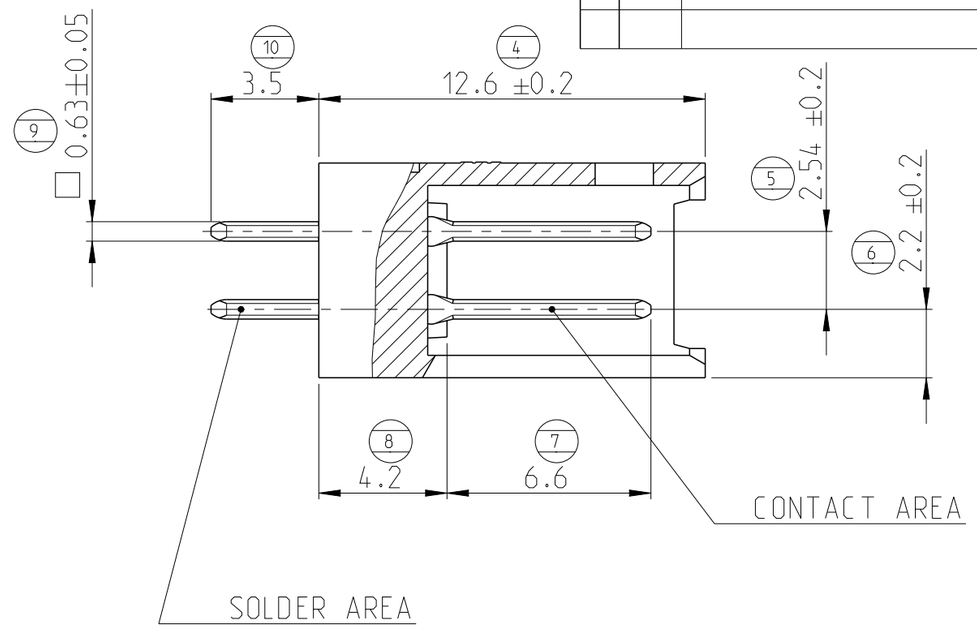

PARTIAL SEC. Z-Z

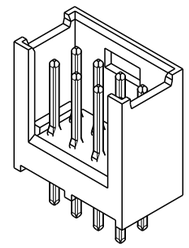

2:1

D	B	PART NUMBER	PART NUMBER	PART NUMBER	NO. POS.
58.5	53.34	~~280388-3~~	280388-2	280388-1	22
48.3	43.18	~~281019-3~~	281019-2	~~281019-1~~	18
40.7	35.56	280387-3	280387-2	280387-1	15
33.1	27.94	~~280521-3~~	280521-2	280521-1	12
25.4	20.32	~~280509-3~~	280509-2	280509-1	9
22.9	17.78	280385-3	280385-2	280385-1	8
12.7	7.62	~~280384-3~~	280384-2	280384-1	4

NOTES:

1. FINISH: 3-5 µm TIN OVER MIN 1.27 µm NICKEL
2. FINISH: MIN. 0.28 µm PdNi + 0.1 µm Au Flash IN CONTACT AREA AND 2.5 µm TIN IN SOLDER AREA, OVER MIN. 1.27 µm NICKEL.
3. FINISH: MIN. 0.66 µm PdNi + 0.1 µm Au Flash IN CONTACT AREA AND 2.5 µm TIN IN SOLDER AREA, OVER MIN. 1.27 µm NICKEL.
4. MATERIALS:
   -HOUSINGS: FLAME RETARDANT THERMOPLASTIC, UL94V0, COLOR BLACK.
   -TIN AND GOLD PLATED CONTACTS: BRASS
5. PN OBSOLETE

THIS DRAWING IS A CONTROLLED DOCUMENT.

DIMENSIONS: mm

TOLERANCES UNLESS OTHERWISE SPECIFIED: ±0.3
0 PLC ±-
1 PLC ±-
2 PLC ±-
3 PLC ±-
4 PLC ±-
ANGLES ±2°

MATERIAL

FINISH
-
-

DWN G. CAMPIA 12FEB1990
CHK -
APVD -
PRODUCT SPEC 108-20025
APPLICATION SPEC -
WEIGHT -

TE Connectivity

NAME AMPMODU II SHROUDED HEADER DUAL ROW, STRAIGHT POST
-

SIZE	CAGE CODE	DRAWING NO	RESTRICTED TO
A3	00779	C-280384	-

CUSTOMER DRAWING | SCALE 5:1 | SHEET 1 OF 1 | REV W

1470-19 (3/13)