© 2023 TE Connectivity. All Rights Reserved.

| REVISIONS | | | | | |
|---|---|---|---|---|---|
| P | LTR | DESCRIPTION | DATE | DWN | APVD |
| | A1 | NEW DRAWING | 28AUG2023 | NK | JDB |
| | D1 | DRAWING RE-CREATED IN CREO | 26DEC2023 | NK | JDB |
| | | | | | |
| | | | | | |

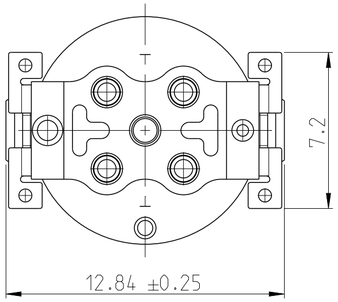


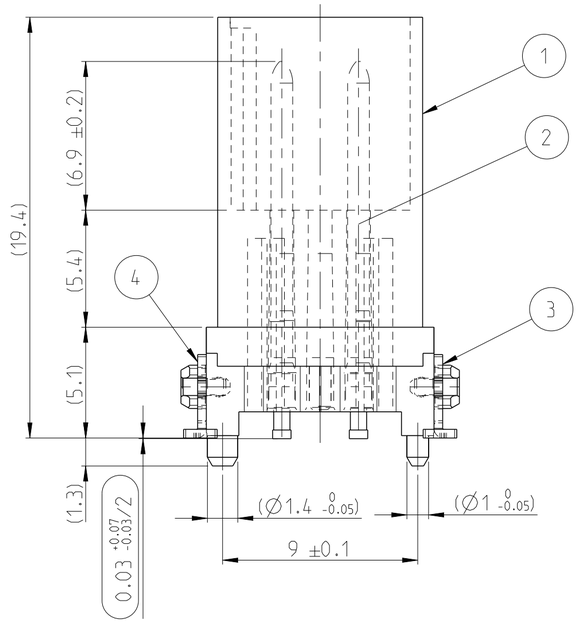


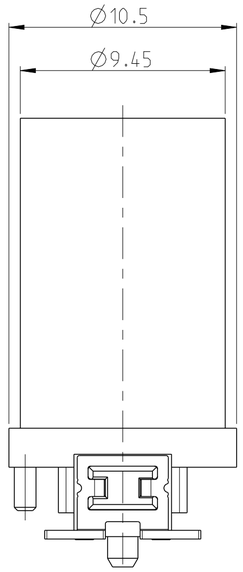


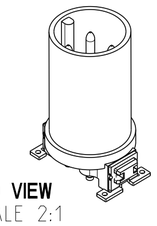

**3D VIEW**
SCALE 2:1

INSPECTION LEVEL 1: CONTROL CHART REQUIRED
/1 PROOF OF PROCESS CAPABILITY OR 100% TEST IF PROCESS CAPABILITY IS NOT ACHIEVED

INSPECTION LEVEL 2 AND 3: CONTROL CHART REQUIRED
/2 PROOF OF MEAN VALUE, STANDARD DEVIATION AND MACHINE CAPABILITY

/3 PROOF OF VALUES OR PROOF OF ATTRIBUTIVE TEST

INFORMATION ON THE SCOPE OF TESTING AND DETECTION BY ERNI VA 7.3.2.3

1. DRAWING SPECIFICATION ACCORDING TO DOCUMENT 5_3_16-DOC-1806-00915
2. COPLANARITY OF ALL CONTACTS AND CHIPS <= 0.1mm
3. HOLDING FORCE CONTACT >20N
4. PART; 100 PCS. IN BUBBLE BAGS/BULK

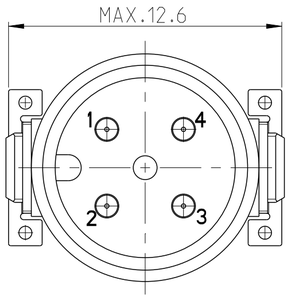


**PCB-LAYOUT PROPOSAL**

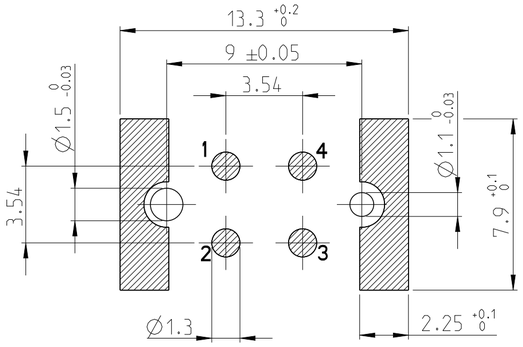


| 254859-E | REV | DESCRIPTION | ITEM NO. |
|---|---|---|---|
| 1 | - | SOLDER CLIP LEFT | 4 |
| 1 | - | SOLDER CLIP RIGHT | 3 |
| 4 | - | PINS | 2 |
| 1 | - | HOUSING | 1 |
| - | REV OF EACH ASSY NO. (WHEN BLANK, USE DWG. REV) | | |
| QTY | PARTS LIST | | |

THIS DRAWING IS A CONTROLLED DOCUMENT.

DIMENSIONS: mm

TOLERANCES UNLESS OTHERWISE SPECIFIED: ISO 8015
0 PLC ±
1 PLC ±
2 PLC ±
3 PLC ±
4 PLC ±
ANGLES ±

MATERIAL -
-

FINISH -

DWN N K NIKHIL 16AUG2023
CHK M SZELAG 18AUG2023
APVD J DE BRUIJN 18AUG2023
PRODUCT SPEC 108-94887
APPLICATION SPEC 114-94781
WEIGHT -

TE Connectivity

NAME M12 MALE, A CODE, 4P, 10.5MM SMT
-

| SIZE | CAGE CODE | DRAWING NO | RESTRICTED TO |
|---|---|---|---|
| A2 | 00779 | C-254859-E | - |

CUSTOMER DRAWING | SCALE 5:1 | SHEET 1 OF 1 | REV D1