© – TE Connectivity. All Rights Reserved.

REVISIONS					
P	LTR	DESCRIPTION	DATE	DWN	APVD
	A	ECN–24–279991;GTP	19AUG2024	TP	WH

NOTES:

ALL DIMENSIONS ARE NOMINAL FOR REFERENCE ONLY UNLESS OTHERWISE STATED;

RoHS: COMPLIANT.

SPECIFICATIONS:

IMPEDANCE: 50Ω

FREQUENCY: DC to 11GHz

VSWR/RL: 1.25 max. / 19.1dB min.

CONTACT RESISTANCE:
CENTER: 3 milliohms max.
OUTER: 2 milliohms max.

INSERTION LOSS: 0.3 dB max.

TEMPERATURE RANGE: –65°C TO +165°C

DURABILITY: 500 cycles min.

ENGAGEMENT AND DISENGAGEMENT FORCE:
ENGAGEMENT:
SMA:2 in–lbs. max.
TNC:2 in–lbs. max
DISENGAGEMENT:
SMA:2 in–lbs. max.
TNC:2 in–lbs. max

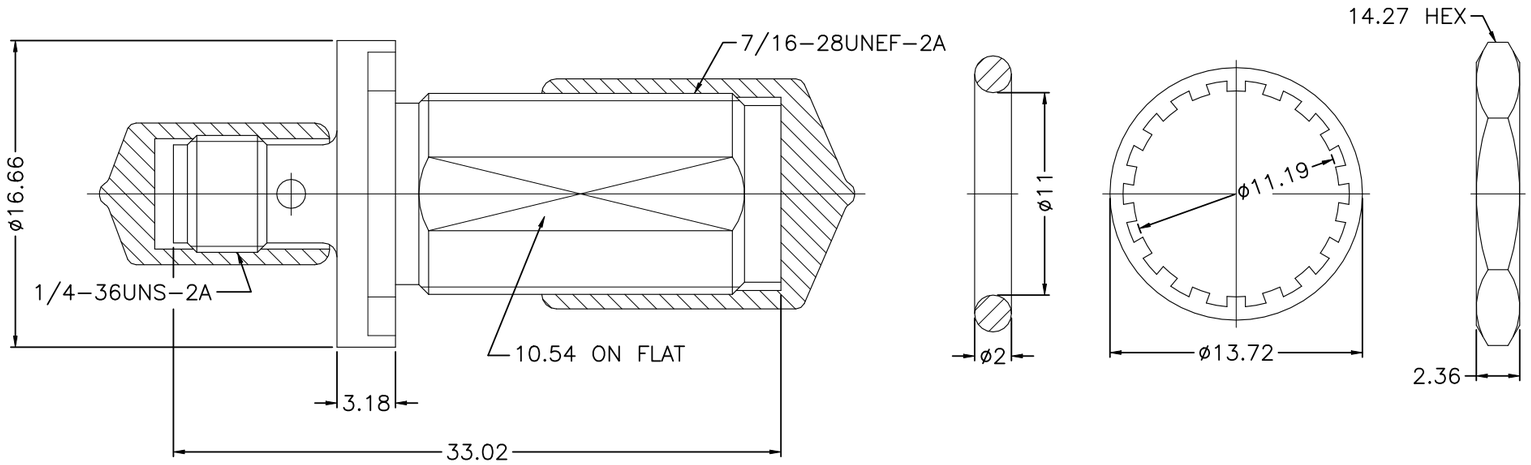

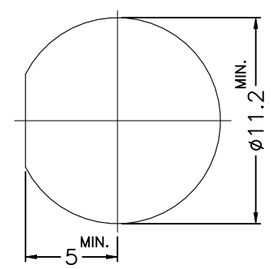

RECOMMENDED
MOUNTING HOLE
MAX. PANEL THICKNESS=6.4mm

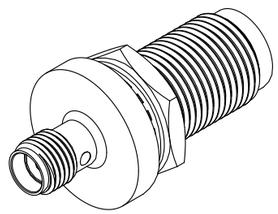

NOTES:

FINISH (PLATING THICKNESS IN MICRO–INCHES)

1. PASSIVATED
2. GOLD PL. 50 MIN. THICK OVER NICKEL PL. 50 MIN. THICK, OVER COPPER PL. 50 MIN. THICK

QUANTITY PER ASSY		FINISH/PLATING	MATERIAL	DESCRIPTION	ITEM
	1	GREEN	PVC	CAP	8
	1	RED	PVC	CAP	7
	1	NOTE 1	STAINLESS STEEL	HEX NUT	6
	1	NOTE 1	STAINLESS STEEL	LOCK WASHER	5
	1	BLACK	FLUOROCARBON RUBBER	GASKET	4
	1	NOTE 2	BERYLLIUM–COP	CONTACT PIN	3
	1	NATURAL	PTFE	INSULATOR	2
	1	NOTE 1	STAINLESS STEEL	BODY	1
	2485928–1				

PARTS LIST

THIS DRAWING IS A CONTROLLED DOCUMENT.

DIMENSIONS: mm

TOLERANCES UNLESS OTHERWISE SPECIFIED:

0 PLC	± 0.3
1 PLC	± 0.2
2 PLC	± 0.1
3 PLC	± 0.05
4 PLC	± –
ANGLES	± 5

MATERIAL: SEE TABLE

FINISH: SEE TABLE

DWN	TP	24APR2024
CHK	TP	24APR2024
APVD	WH	24APR2024

PRODUCT SPEC: SEE NOTED

APPLICATION SPEC: —

WEIGHT: 16.3g

CUSTOMER DRAWING

TE Connectivity

NAME: SMA Jack to TNC Jack Adapter Bulkhead
–
–

SIZE	CAGE CODE	DRAWING NO	RESTRICTED TO
A3	00779	C–2485928	—

SCALE	SHEET	REV
1:1	1 OF 1	A

1470–19 (1/15)