© – TE Connectivity. All Rights Reserved.

REVISIONS					
P	LTR	DESCRIPTION	DATE	DWN	APVD
	A	INITIAL RELEASE	29JUL2024	BTV	KJ

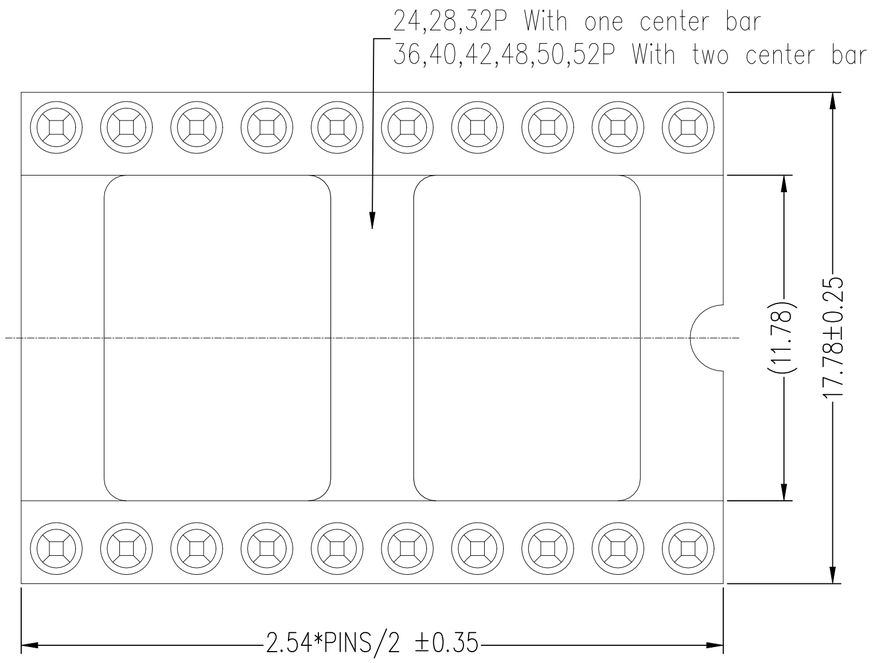

NOTES:

1. MATERIAL:
   - 1, INSULATOR : THERMOPLASTIC UL-94-V-0 BLACK
   - 2, SLEEVE & CONTACT : COPPER ALLOY
   - PLATING – SLEEVE : 2μm MIN Sn OVER 2μm MIN Ni
   - PLATING – CONTACT : △1 5μm min TIN OVER Ni
     - △2 GOLD FLASH OVER Ni
     - △3 0.25μm GOLD OVER Ni
     - △4 0.38μm GOLD OVER Ni
     - △5 0.76μm GOLD OVER Ni
2. PIN SPECIFICATION: CONTACT ACCEPTS: ROUND PIN ø0.40MM TO 0.56MM
3. ELECTRICAL:
   - CONTACT RESISTANCE– 10 mΩ MAX.
   - CONTACT RATING– 1Amp
   - INSULATION RESISTANCE– 1000 MΩ.
   - DIELECTRIC VOLTAGE– 1000V AC
4. ENVIRONMENTAL:
   - OPERATION TEMPERATURE – –55 +125°C
   - SOLDERING PROCESS CAPABILITY – 260°C
5. MECHANICAL LIFE:
   - 500 CYCLES
   - INSERTION FORCE – 200GRAMS/PIN
   - WITHDRAWAL FORCE – 60GRAMS/PIN

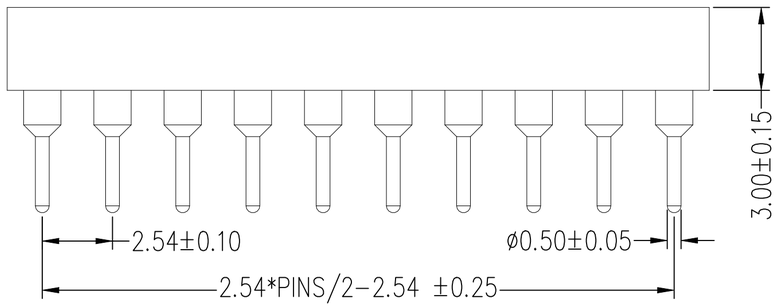

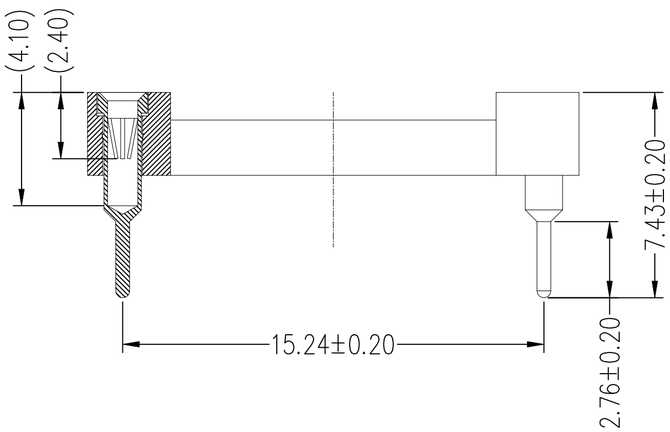

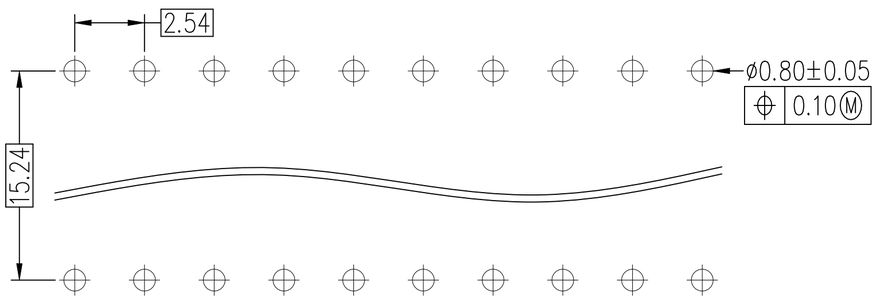

RECOMMENDED P.C.B LAYOUT
(COMPONENT SIDE)(TOLERANCE: ±0.05)

Tube	△2	40	2485265–1
Package	Contact Plating	Number Of Positions	Part No

THIS DRAWING IS A CONTROLLED DOCUMENT.

DIMENSIONS: mm

TOLERANCES UNLESS OTHERWISE SPECIFIED:
0 PLC ± –
1 PLC ± –
2 PLC ± –
3 PLC ± –
4 PLC ± –
ANGLES ± –

MATERIAL –
FINISH –

DWN BONEY THOMAS 10MAY2024
CHK –
APVD KIM JIN 10MAY2024
PRODUCT SPEC 108-160876
APPLICATION SPEC –
WEIGHT –

TE Connectivity

NAME DIP SOCKET PITCH 15.24 –

SIZE	CAGE CODE	DRAWING NO	RESTRICTED TO
A2	00779	C-2485265	–

CUSTOMER DRAWING | SCALE – | SHEET 1 OF 1 | REV A

2485265

1471-9 (1/15)