© 2022 TE Connectivity. All Rights Reserved.

REVISIONS					
P	LTR	DESCRIPTION	DATE	DWN	APVD
	1	INITIAL RELEASE	06DEC2022	YC	WY
	2	ADDED 2443603-2	22JUN2023	YC	WY

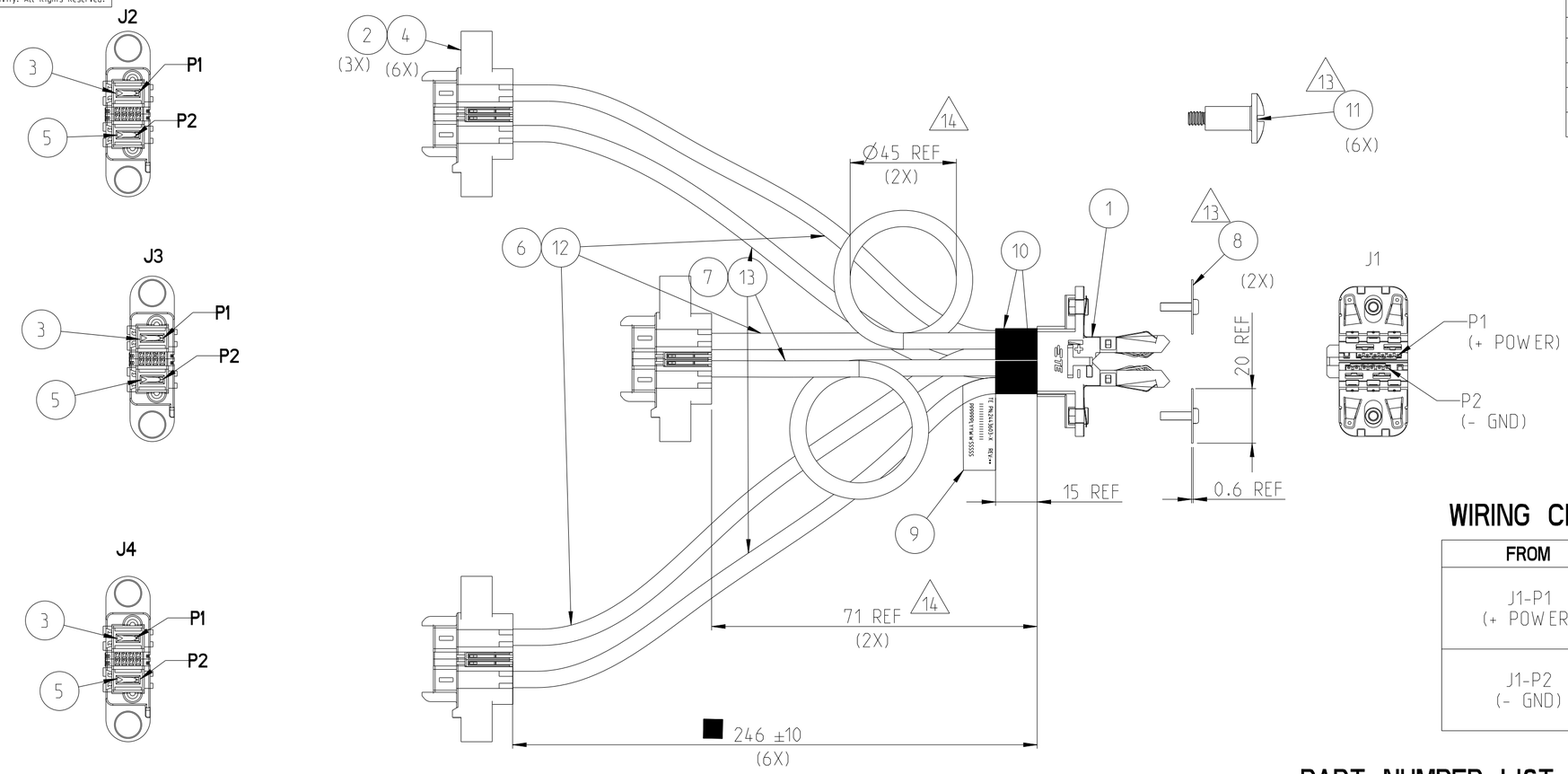

WIRING CHART

FROM	TO	COLOR	AWG
J1-P1 (+ POWER)	J2-P1	RED	8
	J3-P1		
	J4-P1		
J1-P2 (- GND)	J2-P2	BLACK	8
	J3-P2		
	J4-P2		

NOTES:

1. DIMENSION MARKED WITH ■ IS KEY CHARACTERISTIC PER STANDARD OPERATIING PROCEDURE TEC-407-55
2. THE APPREARANCE OF CONNECTORS IN CABLE ASSEMBLY DRAWING IS ILLUSTRATION ONLY, REFER TO THE RESPETIVE COMPONENT DRAWING FOR DETAILS
3. ALL MATERIAL AND PROCESSING MUST MEET REQUIREMENTS OF TE CONNECTIVITY ENVIRONMENTAL STANDARD TEC-138-702
4. SILVER PLATING CONTACTS MAY DISCOLOR IN AIR, BUT NO PERFORMANCE ISSUE.
5. 100% ELECTRICAL TEST FOR OPEN, SHORT, MIS-WIRING AND HI-POT
6. LABEL PRINTED INFORMATION AS FOLLOW(TO BE WRAPPED TO SINGLE WIRE)

```
TE PN:2443603-X  REV:**
||||||||||||||||
PPPPPPLYYWWSSSSS
```

- **:TE C-DRAWING REV.
- BAR CODE,READ AS:PPPPPPLYYWWSSSSS
- SERIAL NUMBER:

PPPPPP = 6-DIGIT,BASE 34. ALPHANUMERIC CHARACTERS, SEE PN TABLE (EXCLUDES I AND O)
L=MANUFACTURING LOCATION CODE (H=HBG,D=DGN,A=MEXICO)
YYWW =DATE CODE. 2-DIGIT YEAR, 2-DIGIT WEEK
SSSSS = 5-DIGIT. BASE 34. ALPHANUMERIC CHARACTERS,(EXCLUDES I AND O)

7. THE CABLE ASSEMBLY IS UL WIRING HARNESS (ZPFW2) COMPLIANT.
8. THE PRODUCT MEET REQUIREMENTS OF TE CONNECTIVITY ENVIRONMENTAL STANDARD TEC-138-702
9. THE MATING BUSBAR SHOULD HAVE SURFACE ROUGHNESS Ra 1.6 µm MAX. SHOULD HAVE PLATING 3 µm MIN IN CONTACT AREA AND 1.27 µm MIN. NICKLE OVERALL
10. MINIMUM BEND RADIUS: 5 X CABLE DIAMETER
11. CONTACT CRIMP TENSILE STRENGTH FOLLOW UL 486A
12. SUGGESTED M3 SCREW TIGHTEN TORQUE 8N-CM MAX.
13. 6PCS HARDWARE KIT FOR MBXLE AND 2PCS SCREW/WASHERS FOR ORV3 HSG WILL BE PACKED SEPARATELY
14. THE CENTER TWO WIRES LENGTH BEFORE ROLLING ARE SAME AS OTHER

PART NUMBER LIST

NAME	TE P/N	PPPPPP	CUSTOMER P/N	TE C-DWG Rev
CA ORV3 TO 1ACP+8S+1ACP MBXLE RECEPTACLE	2443603-1	5CV6BP	-	02
CA ORV3 TO 1ACP+8S+1ACP MBXLE RECEPTACLE TPU CABLE	2443603-2	5CV6BQ	-	

-2	-1	UNIT	DESCRIPTION	ITEM
AR	-	AR	TPU WIRE, 8AWG, BLACK, H-FLAMMABILITY	13
AR	-	MR	TPU WIRE, 8AWG, RED, H-FLAMMABILITY	12
6	6	PC	HARDWARE KIT	11
AR	AR	MR	HST	10
1	1	PC	LABEL	9
2	2	PC	M3 SCREW & WASHER	8
-	AR	MR	UL3132, 8AWG, BLACK	7
-	AR	MR	UL3132, 8AWG, RED	6
3	3	PC	MBXLE RECEPT POWER CONTACT MFBL	5
6	6	PC	MBXLE RECEPT POWER LOCK HF	4
3	3	PC	MBXLE RECEPT POWER CONTACT STD	3
3	3	PC	PANEL MOUNT CABLE RECEPTACLE MBXLE 1P+8S+1P HSG	2
1	1	PC	ORV3 HOUSING ASSEMBLY	1

THIS DRAWING IS A CONTROLLED DOCUMENT.

DIMENSIONS: mm

TOLERANCES UNLESS OTHERWISE SPECIFIED:
0 PLC ±
1 PLC ±
2 PLC ±
3 PLC ±
4 PLC ±
ANGLES ±

MATERIAL -
FINISH -

DWN YOGESHCHANDRA 06DEC2022
CHK -
APVD WILLIAM Y 06DEC2022
PRODUCT SPEC -
APPLICATION SPEC -
WEIGHT -

TE Connectivity

NAME CA ORV3 TO PANEL MOUNT RECEPTACLE MBXLE 1P+8S+1P 3NOS

SIZE	CAGE CODE	DRAWING NO	RESTRICTED TO
A2	00779	C-2443603	-

CUSTOMER DRAWING | SCALE NTS | SHEET 1 OF 2 | REV 2

© 2022 TE Connectivity. All Rights Reserved.

REVISIONS					
P	LTR	DESCRIPTION	DATE	DWN	APVD
	-	SEE SHEET 1	-	-	-

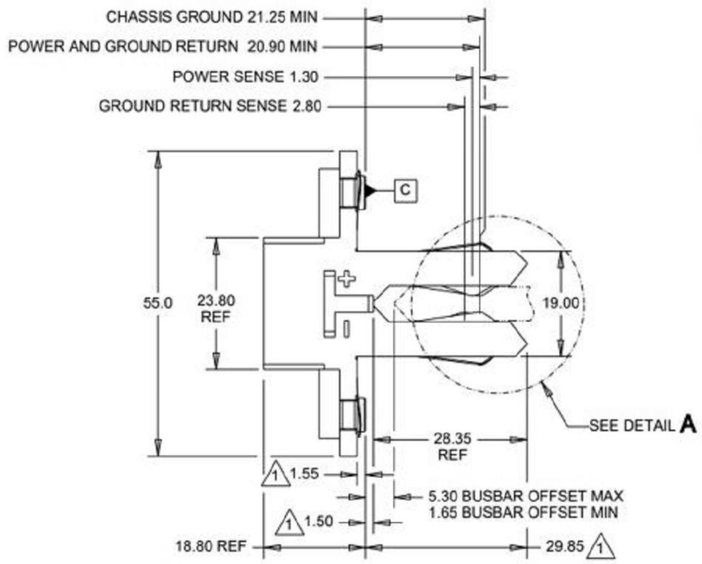

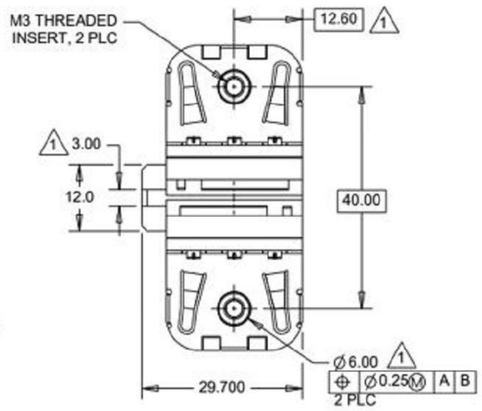

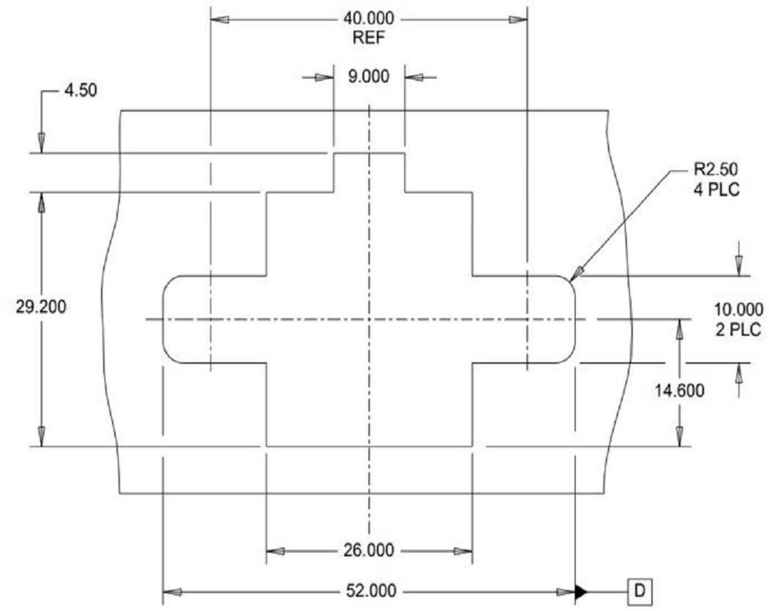

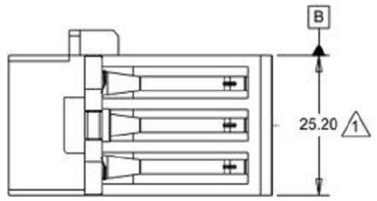

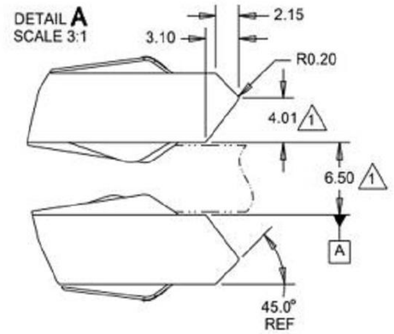

DEFAULT TOLERANCES:
1 PLACE: ±0.30
2 PLACE: ±0.20
3 PLACE: ±0.10
ANGLES: ±0.5°

NOTES:

1. INDICATED DIMENSIONS TO MAINTAIN A MINIMUM CPK OF 1.33

DEFAULT TOLERANCES:
1 PLACE: ±0.30
2 PLACE: ±0.20
3 PLACE: ±0.10
ANGLES: ±0.5°

NOTES:

1. DATUM D SHOWN AS A REFERENCE TO THE IT GEAR SPECIFICATION

THIS DRAWING IS A CONTROLLED DOCUMENT.	DWN 06DEC2022 YOGESHCHANDRA	TE Connectivity	
DIMENSIONS: mm	CHK -		
TOLERANCES UNLESS OTHERWISE SPECIFIED: 0 PLC ± 1 PLC ± 2 PLC ± 3 PLC ± 4 PLC ± ANGLES ±	APVD 06DEC2022 WILLIAM Y	NAME CA ORV3 TO PANEL MOUNT RECEPTACLE MBXLE 1P+8S+1P 3NOS -	
	PRODUCT SPEC -		
	APPLICATION SPEC -	SIZE A2 / CAGE CODE 00779 / DRAWING NO C-2443603	RESTRICTED TO -
MATERIAL - -	FINISH - -	WEIGHT -	
	CUSTOMER DRAWING	SCALE NTS / SHEET 2 OF 2	REV 2