© 2022 TE Connectivity. All Rights Reserved.

REVISIONS					
P	LTR	DESCRIPTION	DATE	DWN	APVD
	A	NEW RELEASE	26NOV2022	R.L	J.Z
	A1	ADD NOTE 6	9JAN2023	R.L	J.Z
	A2	ECN-24-274868	11JUL2024	SDT	J.Z

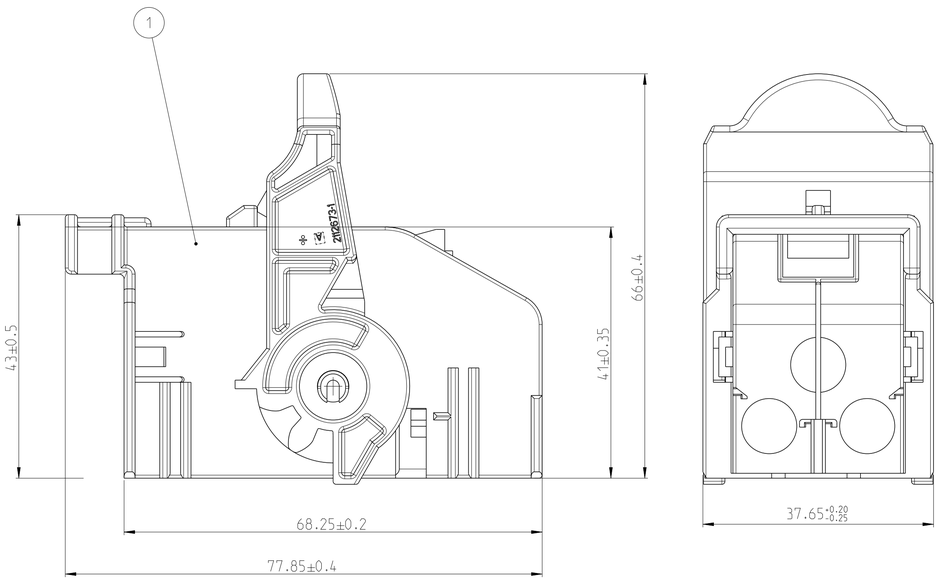

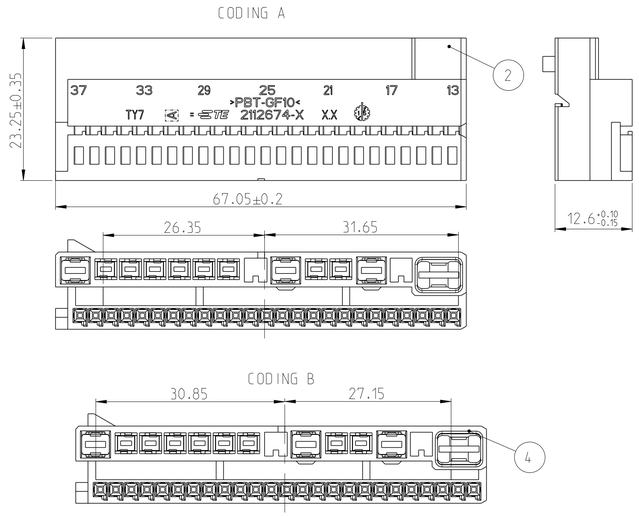

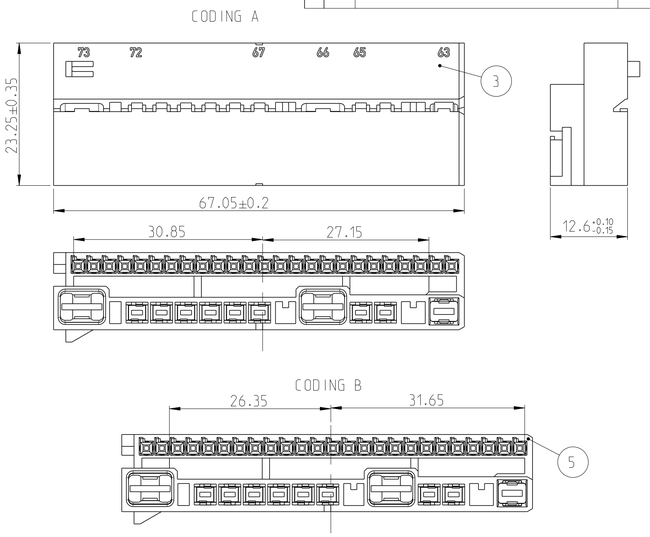

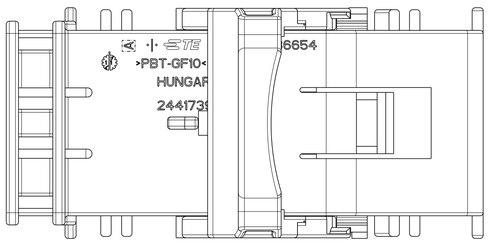

NOTES (A2)

1. INTERFACE ACC. TO VW NO 500 900 962 B
2. SUITABLE CONTACTS E.G.: AMP MCP4.8K 1241404-1, 1241406-1
   AMP MCP2.8K 1241388-1, 1241390-1}
   AMP MCP1.5K 1241372-1, 1241374-1
   TE MQS 928999-1, 963715-1
3. HOUSING AND INSERTS SHOULD BE ORDERED SEPARATELY (2436654, 2112674, 2112675)
4. PACKAGING: SEE SINGLE PARTS
5. SPARE PART KIT, COMPONENTS SEE TABLE, POS 2 AND 3 UNASSEMBLED SEALED IN NEUTRAL PLASTIC BAG

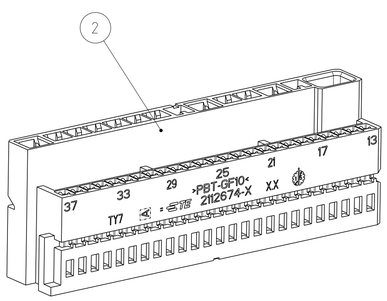

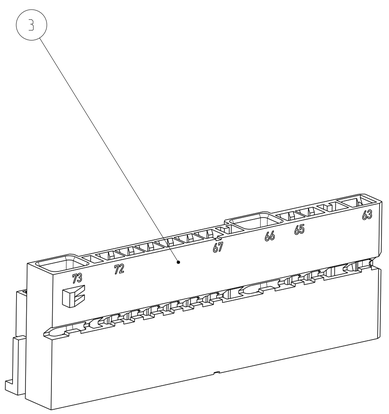

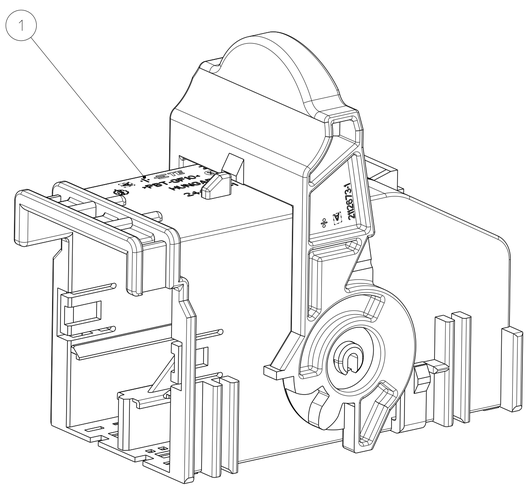

3x AMP MCP 4.8K
4x AMP MCP 2.8K
16x AMP MCP1.5k
50x MQS

KIT PART NO	REV	TE ORDER NO.	REV	CODING	DESCRIPTION	COLOUR	ITEM NO
1-2441727-2 (5)	A	0-2112675-2	A	B	36 POS REC HSG	NATURAL	5
		0-2112674-2	A	B	37 POS REC HSG	NATURAL	4
		0-2436654-1	A		LEVER	NATURAL	1
					COVER USED ON 73POS HSG.	BLACK	
1-2441727-1 (5)	A	0-2112675-1	A	A	36 POS REC HSG	BLACK RAL 9011	3
		0-2112674-1	A	A	37 POS REC HSG	BLACK RAL 9011	2
		0-2436654-1	A		LEVER	NATURAL	1
					COVER USED ON 73POS HSG.	BLACK	

THIS DRAWING IS A CONTROLLED DOCUMENT.

DIMENSIONS: mm

TOLERANCES UNLESS OTHERWISE SPECIFIED
0 PLC ±
1 PLC ±
2 PLC ±
3 PLC ±
4 PLC ±
ANGLES ±2

MATERIAL -
FINISH -

DWN R.LI 26NOV2022
CHK T.DONG 26NOV2022
APVD J.ZONG 26NOV2022
PRODUCT SPEC -
APPLICATION SPEC -
WEIGHT 48.7 [g]

TE Connectivity

NAME 73 POS. MIXED. RECEPTACLE HOUSING.

SIZE A1 | CAGE CODE - | DRAWING NO C-2441727 | RESTRICTED TO -

CUSTOMER DRAWING | SCALE 2:1 | SHEET 1 OF 1 | REV A2

4805 (3/13)