© 2023 TE Connectivity. All Rights Reserved.

REVISIONS					
P	LTR	DESCRIPTION	DATE	DWN	APVD
	A	INITIAL RELEASE	21MAR2023	ZD	ZZ

AS SHOWN 2441710-1

MATED WITH: SEE NOTE

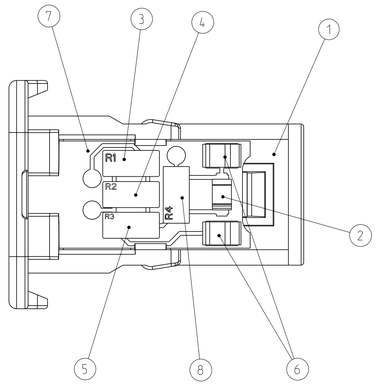

NOTES

1. TE COMPONENT PART NO.
2. DATE CLOCK OF THE SINGLE PART
3. LETTER-INSERT FOR THE REVISION STATUS OF THE COMPONENT MOULD
4. MATERIAL MARKING
5. SUITABLE COUNTERPART DT06-2S (LED). SEE DRAWING: 2286003
6. MALFUNCTION CAUSED BY LAQUER IS NOT COVERD BY TE WARRANTY
7. PACKAGING IN TUBES ACCORDING TO PACKAGING SPEC V2286014

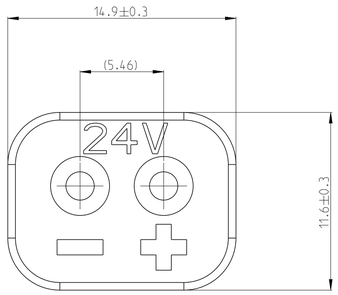

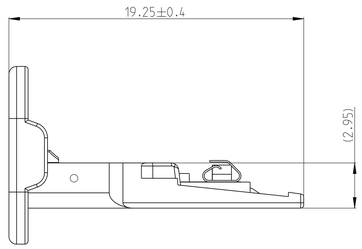

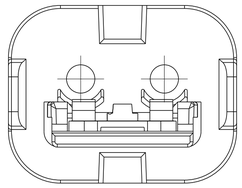

AS SHOWN 2441710-2

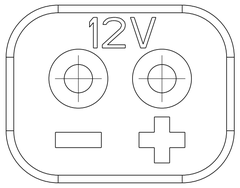

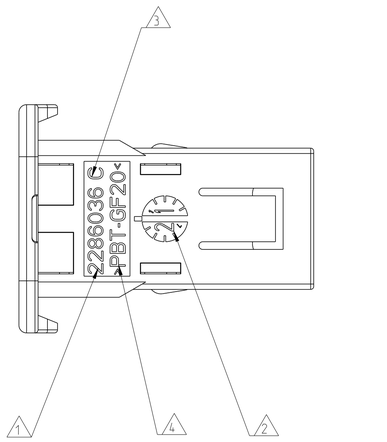

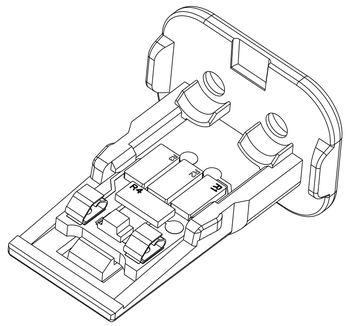

WIRING DIAGRAM FOR 2441710-1/-2 AS SHOWN
VARIANT 1 (12V/24V DC)

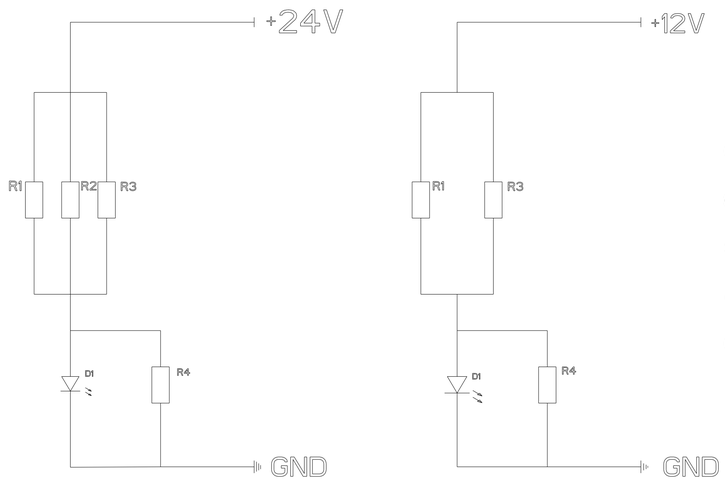

LEGEND

2	LED
3	R1
4	R2
5	R3
8	R4

APPLICATION	TE ORDER-NO.	REV.	POS.	QTY	MATERIAL	COLOUR	DESCRIPTION	ITEM
12V VERSION	2441710-2	A	8	1	-	-	RES SMD 3.9K OHM TYP:0805	2
			7	1	-	-	PCB LAMINATE	
			6	2	-	-	TYP:SMD SPRING CONTACT	
			5	1	-	SILVER	RES SMD 2.7K OHM TYP:0805	
			4	0	-	-	NA	
			3	1	-	RED	RES SMD 2.7K OHM TYP:0805	
			2	1	-	-	SMD-LED(RED) TYP:0805	
			1	1	PBT-GF20	YELLOW	TPA(WEDGE)	
24V VERSION	2441710-1	A	8	1	-	-	RES SMD 3.9K OHM TYP:0805	1
			7	1	-	-	PCB LAMINATE	
			6	2	-	SILVER	TYP:SMD SPRING CONTACT	
			5	1	-	-	RES SMD 10K OHM TYP:0805	
			4	1	-	-	RES SMD 10K OHM TYP:0805	
			3	1	-	-	RES SMD 10K OHM TYP:0805	
			2	1	-	RED	SMD-LED(RED) TYP:0805	
			1	1	PBT-GF20	RED	TPA(WEDGE)	

TOLERANCE UNLESS OTHERWISE SPECIFIED ACC. TO DIN 16901-140 CENTRIC TO NOMINAL DIMENSION. EDITION 1982-11 SHALL APPLY.

THIS DRAWING IS A CONTROLLED DOCUMENT.
DIMENSIONS AND TOLERANCE PER GPS (ISO STANDARDS)

DIMENSIONS: mm

TOLERANCES UNLESS OTHERWISE SPECIFIED: ALL GENERAL TOLERANCE ACC. TO ISO 8015
1 PLC ±
2 PLC ±
3 PLC ±
4 PLC ±
ANGLES ±1°

MATERIAL: SEE TABLE
FINISH: SEE TABLE

DWN	D.ZONG	21MAR2023
CHK	C.WAN	21MAR2023
APVD	Z.ZHOU	21MAR2023
PRODUCT SPEC	108-94369	
APPLICATION SPEC	114-94237	
WEIGHT	-	

TE Connectivity

NAME: TPA,LED,ASSY W2S, WEDGE WITH LED

SIZE	CAGE CODE	DRAWING NO	RESTRICTED TO
A1	00779	C-2441710	-

CUSTOMER DRAWING | SCALE 5:1 | SHEET 1 OF 1 | REV 1

4805 (3/13)