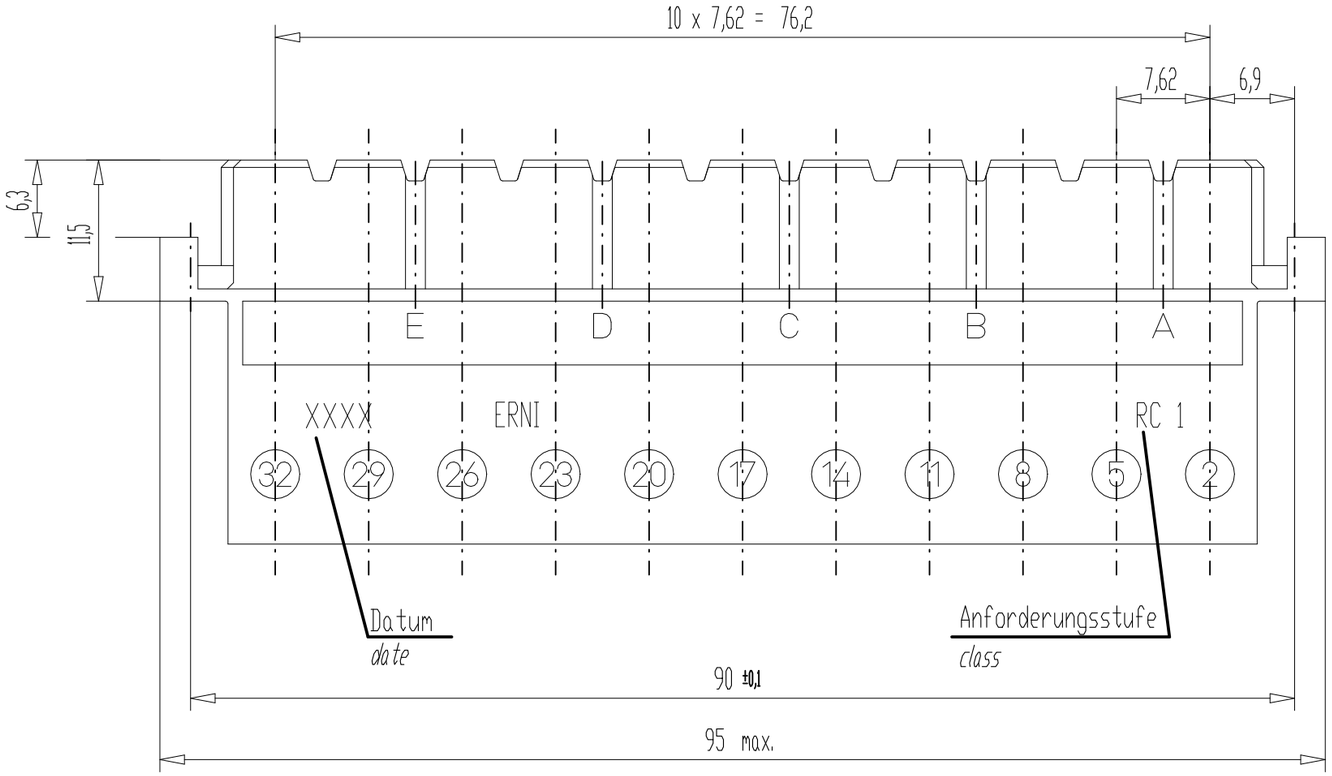

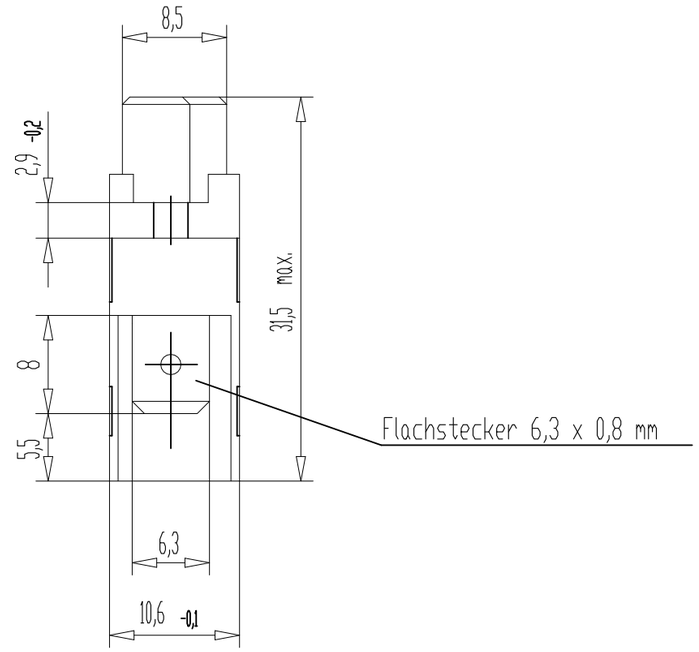

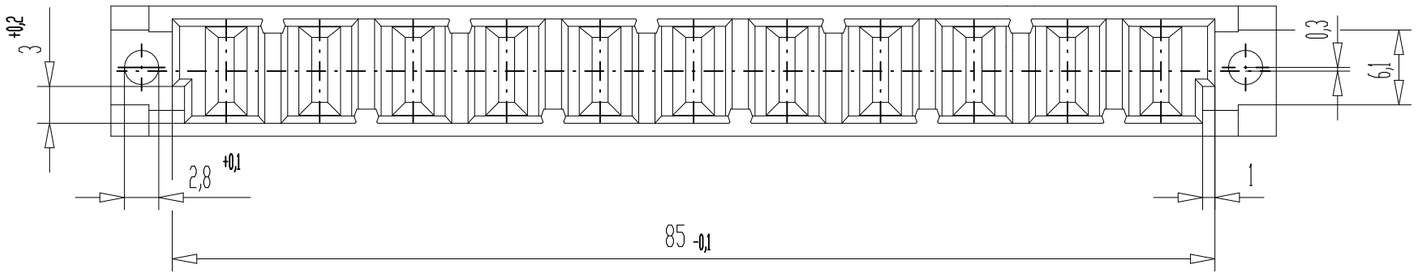

Flachstecker 6,3 x 0,8 mm / *Slip-on tabs 6,3 x 0,8 mm*

Isolierwerkstoff / *housing material* : PC GF30

Bauart 3 / *type 3*

Anforderungsstufe 1 = 500 Steckzyklen / *performance class 1 = 500 mating cycles*

Fehlende Maße und Angaben gemäß IEC 60 603-2 / DIN EN 60 603-2

Missing information and dimensions according to IEC 60 603-2

Bestückungsplan / *contact layout*

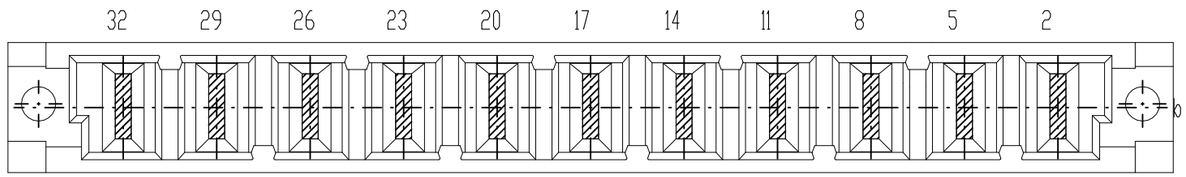

= bestückt / assemble

Information:	Tolerances Dim. for Information ISO 8015	All Dimensions in mm	Scale 2:1
Customer drawing: THIS DRAWING IS A CONTROLLED DOCUMENT.	Subject to modification without prior notice. Drawing will not be updated.		Designation ERNI-Federleiste H 11 *Fem. Connector H 11*
b / Index	14.12.2010 / Date	TE Connectivity V:00070325.SZA	C-243246-E / STVH11 — 1 / -

Consider protection memo from DIN 34