THIS DRAWING IS UNPUBLISHED. RELEASED FOR PUBLICATION 20
© COPYRIGHT 20 BY - ALL RIGHTS RESERVED.

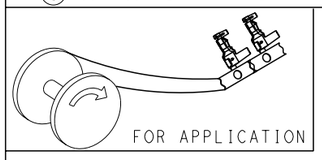


REVISIONS

| P | LTR | DESCRIPTION | DATE | DWN | APVD |
|---|---|---|---|---|---|
| | A | INITIAL RELEASE | 20FEB2023 | M.G | D.Z |
| | | | | | |
| | | | | | |
| | | | | | |

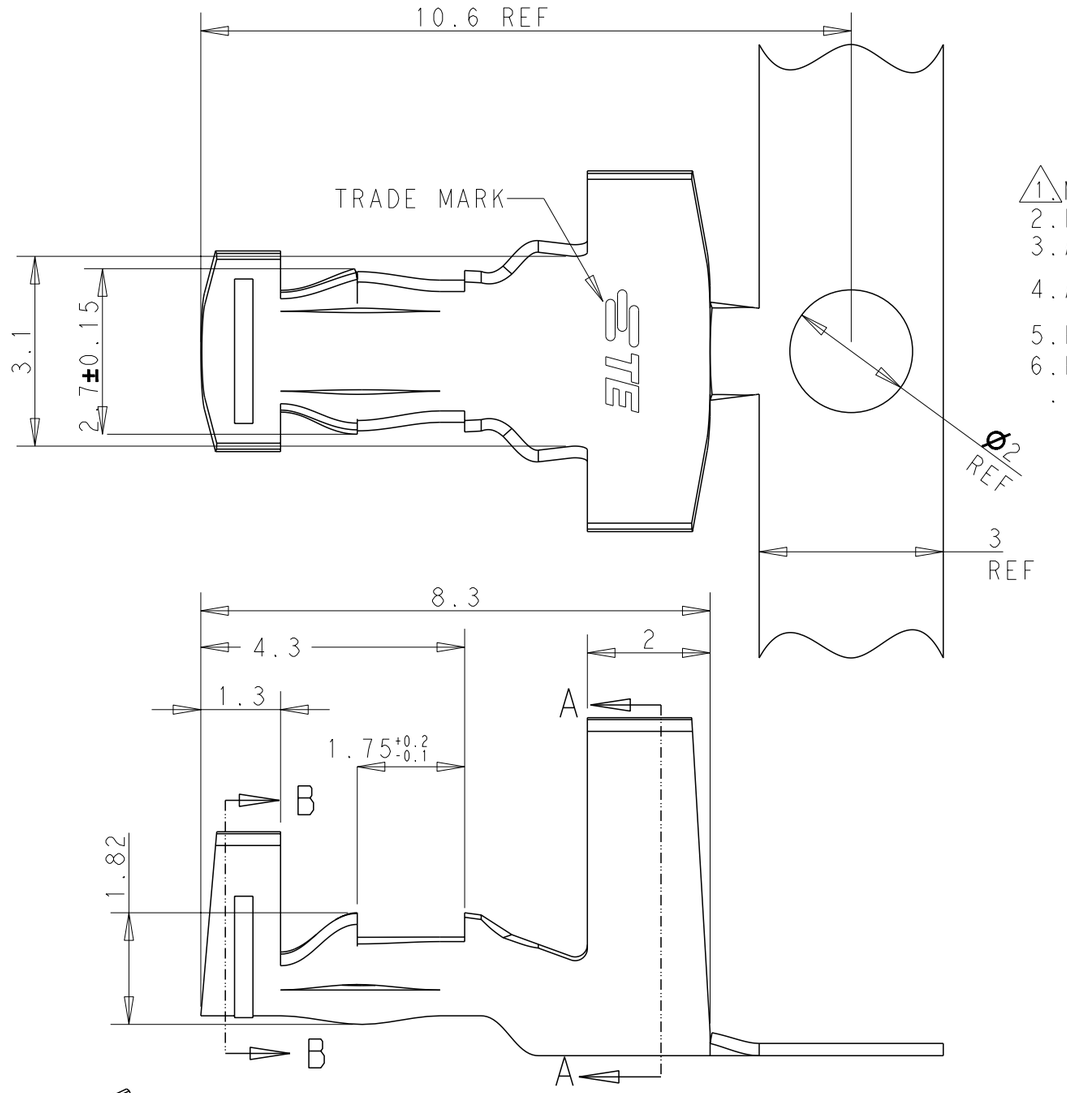


1. MATERIAL: COPPER ALLOY, PRE TIN
2. PACKAGE: REEL
3. APPLICATION FEED PITCH:14MM
4. APPLICABLE WIRE:AWG18-16, INS DIA Ø2.8-3.4MM
5. RECOMMEND PCB HOLE DIA Ø2.35-2.45MM
6. RECOMMEND PCB THICKNESS 1.6±0.05MM

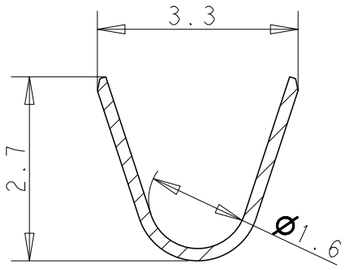


SECTION B-B

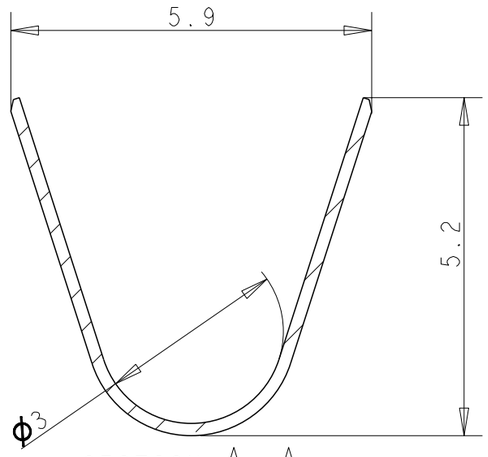


SECTION A-A

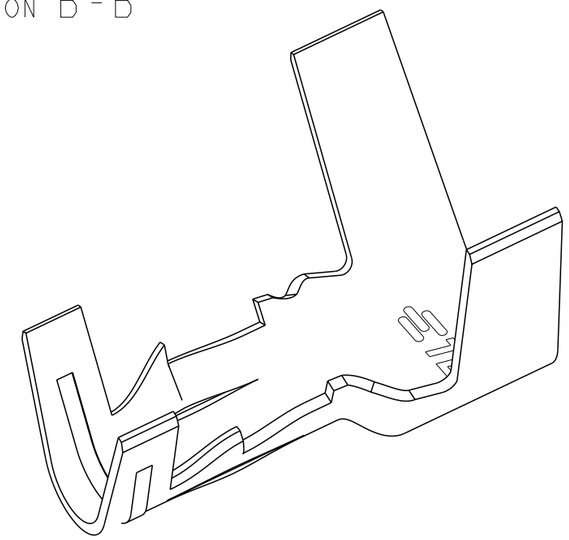

| 2700PC/BOX | 2393222-1 |
|---|---|
| PACKAGE QUANTITY | PART NUMBER |

THIS DRAWING IS A CONTROLLED DOCUMENT.

DIMENSIONS: mm

TOLERANCES UNLESS OTHERWISE SPECIFIED:
0 PLC ±0.3
1 PLC ±0.3
2 PLC ±0.3
3 PLC ±
4 PLC ±
ANGLES ±1°

MATERIAL 1

FINISH 1 PRE TIN

DWN M.GAO 26-09-2021
CHK L.CHEN 27-09-2021
APVD D.ZHANG 28-09-2021
PRODUCT SPEC 108-106642
APPLICATION SPEC 114-106642
WEIGHT 0.150

CUSTOMER DRAWING

TE Connectivity

NAME BOARD-IN CONTACT S-TYPE

| SIZE | CAGE CODE | DRAWING NO | RESTRICTED TO |
|---|---|---|---|
| A3 | 00779 | C-2393222 | - |

SCALE 10:1 SHEET 1 OF 1 REV A



printed on 20 Feb 2023 13:27 (China Standard Time) from TE315078