© 2022TE Connectivity. All Rights Reserved.

REVISIONS

P	LTR	DESCRIPTION	DATE	DWN	APVD
	A	REVISED PER ECN-23-195185	23JAN2023	SS	RE

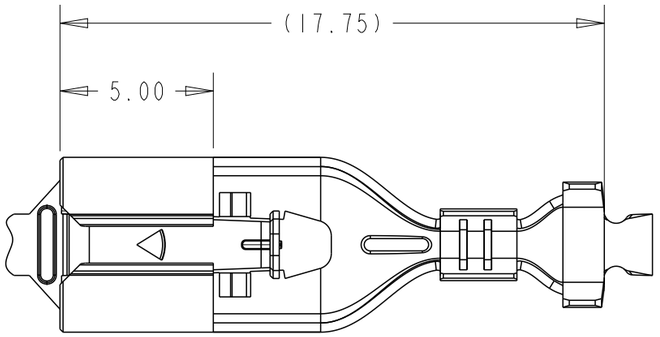

1.WIRE RANGE: 22-18AWG

2.INSULATION RANGE: 1.6-2.5 mm

3.CONTINUOUS STRIP ON REEL

4.PRELIMINARY- NOT RELEASED FOR PRODUCTION

5.MATING TAB THICKNESS :0.80MM

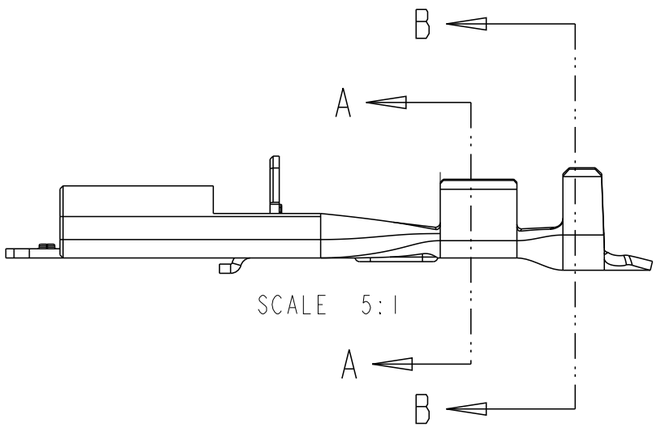

SCALE 5:1

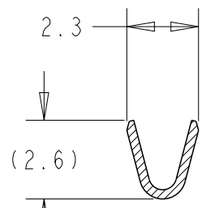

SECTION A-A

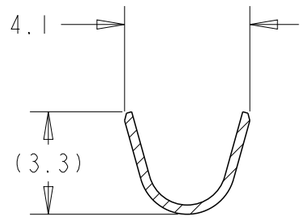

SECTION B-B

PRE-TIN BRASS 0.30 THICKNESS	2392417-1
MATERIAL	PART NUMBER

THIS DRAWING IS A CONTROLLED DOCUMENT.

DIMENSIONS: mm

TOLERANCES UNLESS OTHERWISE SPECIFIED:

0 PLC	±-
1 PLC	±0.30
2 PLC	±0.25
3 PLC	±0.25
4 PLC	±
ANGLES	±-

MATERIAL: - See table

FINISH: - See table

DWN DAISY LI 25MAR2022

CHK DAISY LI 25MAR2022

APVD ERIC WANG 25MAR2022

PRODUCT SPEC 108-106654

APPLICATION SPEC 114-106546

WEIGHT -

CUSTOMER DRAWING

TE Connectivity

NAME 187 SERIES POSITIVE LOCK - EX

-

SIZE	CAGE CODE	DRAWING NO	RESTRICTED TO
A3	00779	C-2392417	-

SCALE	SHEET	REV
3:1	1 OF 1	A

1470-19 (3/13)