THIS DRAWING IS UNPUBLISHED. RELEASED FOR PUBLICATION 20
© COPYRIGHT 2022 Copyright date TE Connectivity. All Rights Reserved. ALL RIGHTS RESERVED.

REVISIONS

P	LTR	DESCRIPTION	DATE	DWN	APVD
	A	INITIAL RELEASE	31AUG2021	A.H	I.Y
	A1	REVISED PER ECN-22-156656	31MAY2022	A.H	F.P
	A2	REVISED PER ECN-24-254967	05MAR2024	A.H	F.P

CODINGS

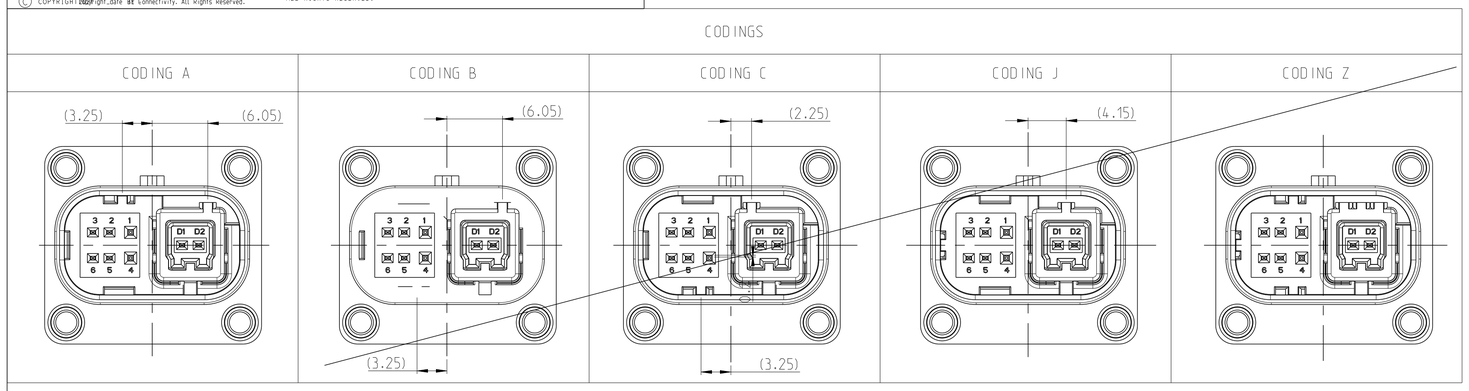

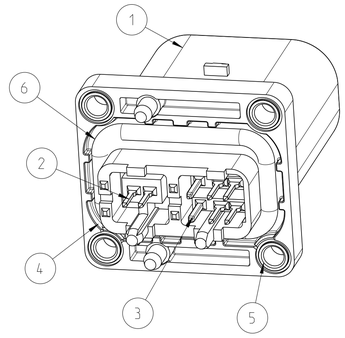

1 INTERFACE DESIGN ARE LEFT TO TE CONNECTITY

2 ALL DIMENSIONS IN ( ) FOR INFORATION ONLY

3 SOLDERING PROCESS: LEAD FREE REFLOW SOLDERING IN REFERENCE TO JEDEC J-STD-020D

4 CONTACT AND SHIELDING ARE OVERMOLDED INTO HOUSING TO MEET DUST PROOF BEFORE ENVIRONMENT TEST.

5 MATED WITH TE PLUG X-2387380-X

6 CODE A AS SHOWN

7 COMPONENT PART NUMBER. EXCHANGEABLE SEE TABLE

8 ASSEMBLY PART NUMBER. EXCHANGEABLE SEE TABLE

9 MOLD CAVITY MARKING: 2.1~2.2

10 MATERIAL MARKING

11 PRODUCTION DATE CLOCK

12 TE LOGO

13 POSTS AND PCB HOLES ARE OPTIONAL:
2387351-*: THERE ARE 2 POSTS MATCHED WITH PCB HOLES.
1-2387351-*: THERE ARE NO POSTS MATCHED WITH PCB HOLES

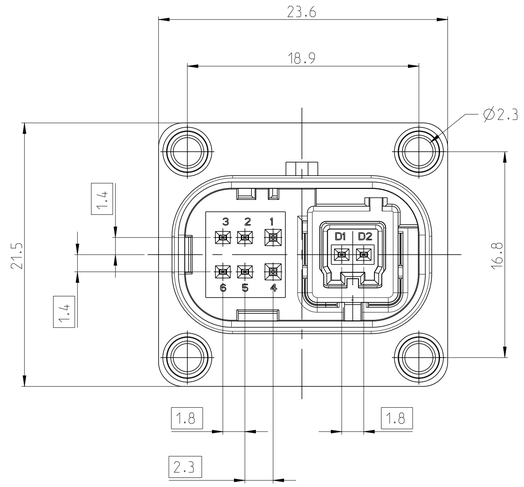

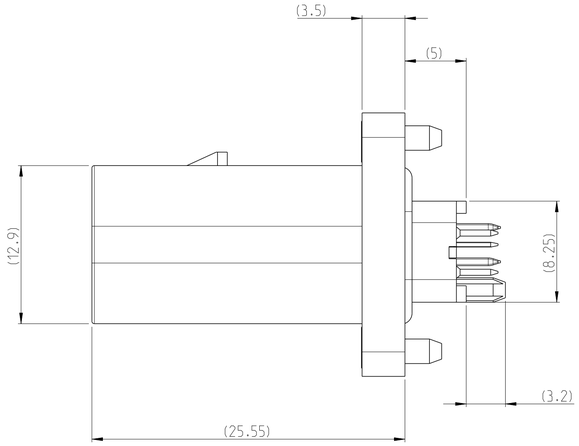

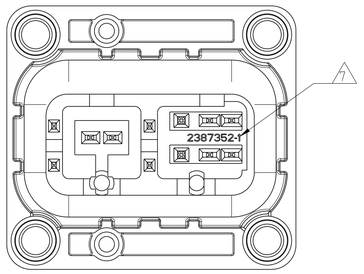

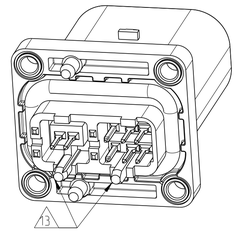

2387351-* AS SHOWN

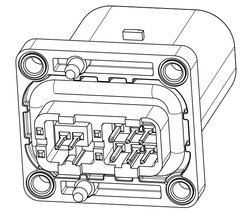

1-2387351-* AS SHOWN

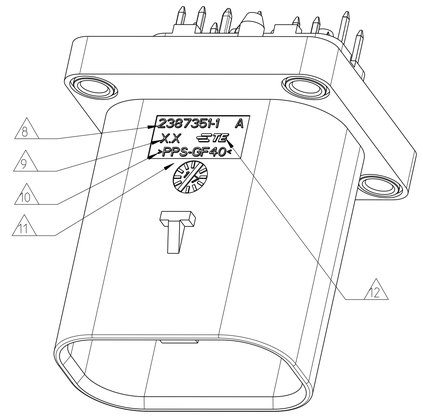

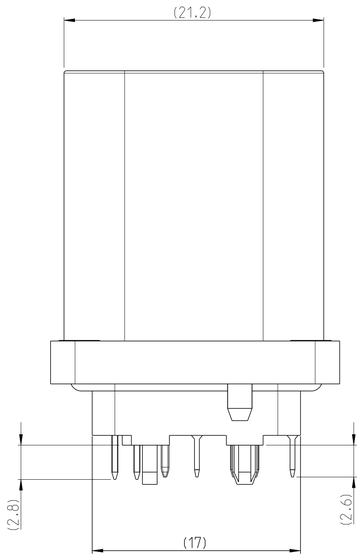

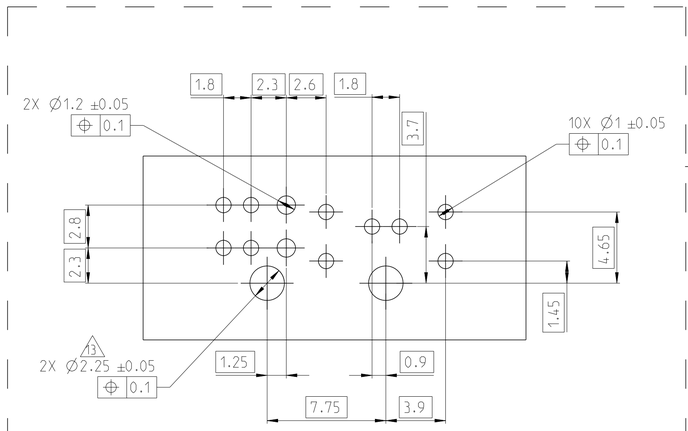

RECOMMENDED PCB LAYOUT

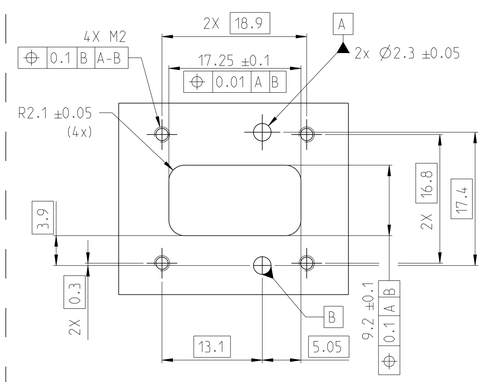

RECOMMENDED HOLES

PN	REV.	CODE	QTY.	DESCRIPTION	MATERIAL	WEIGHT [g]	COLOR/ SURFACE	POS
2387351-9 OR 1-2387351-1	A	Z	1	SEALING	SILICONE RUBBER	-	MILKY YELLOW	6
			4	BUSHING	STAINLESS STEEL		-	5
			1	U SHIELDING	STAINLESS STEEL		Ni/Sn	4
			2	MQS TAB	Cu ALLOY		Ni/Sn	3
			6	NANO-MQS TAB	Cu ALLOY		Ni/Sn	2
			1	HOUSING	PPS-GF40		NOT DEFINED	1
2387351-7 OR 1-2387351-7	A	J	1	SEALING	SILICONE RUBBER	-	MILKY YELLOW	6
			4	BUSHING	STAINLESS STEEL		-	5
			1	U SHIELDING	STAINLESS STEEL		Ni/Sn	4
			2	MQS TAB	Cu ALLOY		Ni/Sn	3
			6	NANO-MQS TAB	Cu ALLOY		Ni/Sn	2
			1	HOUSING	PPS-GF40		NOT DEFINED	1
2387351-3 OR 1-2387351-3	A	C	1	SEALING	SILICONE RUBBER	-	MILKY YELLOW	
			4	BUSHING	STAINLESS STEEL		-	
			1	U SHIELDING	STAINLESS STEEL		Ni/Sn	
			2	MQS TAB	Cu ALLOY		Ni/Sn	
			6	NANO-MQS TAB	Cu ALLOY		Ni/Sn	
			1	HOUSING	PPS-GF40		BLUE	1
2387351-2 OR 1-2387351-2	A	B	1	SEALING	SILICONE RUBBER	-	MILKY YELLOW	6
			4	BUSHING	STAINLESS STEEL		-	5
			1	U SHIELDING	STAINLESS STEEL		Ni/Sn	4
			2	MQS TAB	Cu ALLOY		Ni/Sn	3
			6	NANO-MQS TAB	Cu ALLOY		Ni/Sn	2
			1	HOUSING	PPS-GF40		WHITE	1
2387351-1 OR 1-2387351-1	A	A	1	SEALING	SILICONE RUBBER	-	MILKY YELLOW	6
			4	BUSHING	STAINLESS STEEL		-	5
			1	U SHIELDING	STAINLESS STEEL		Ni/Sn	4
			2	MQS TAB	Cu ALLOY		Ni/Sn	3
			6	NANO-MQS TAB	Cu ALLOY		Ni/Sn	2
			1	HOUSING	PPS-GF40		BLACK	1

THIS DRAWING IS A CONTROLLED DOCUMENT.

DIMENSIONS: mm

TOLERANCES UNLESS OTHERWISE SPECIFIED:
0 PLC ±0.4
1 PLC ±0.3
2 PLC ±0.2
3 PLC ±
4 PLC ±
ANGLES ±2

MATERIAL: TBD see table
FINISH: - see table

DWN A.HUANG 29JAN2021
CHK F.PAN 29JAN2021
APVD I.YIN 29JAN2021
PRODUCT SPEC -
APPLICATION SPEC -
WEIGHT SEE TABLE

TE Connectivity

NAME: MATENET MINI LIDAR HYBRID HEADER ASSEBLY

SIZE A1 | CAGE CODE - | DRAWING NO C-2387351 | RESTRICTED TO -

CUSTOMER DRAWING | SCALE 4:1 | SHEET 1 OF 1 | REV A2

4805 (3/13)