© 2021 TE Connectivity. All Rights Reserved.

REVISIONS					
P	LTR	DESCRIPTION	DATE	DWN	APVD
	A	INITIAL RELEASE	31Aug22	J.H	W.Z
	B	PCN-25-236676	25FEB25	Y.L	Z.Z

2386340-1 IS SHOWN

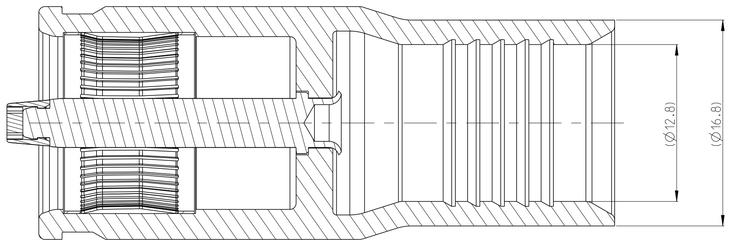

SECTION SHOWN
PN 2386340-1

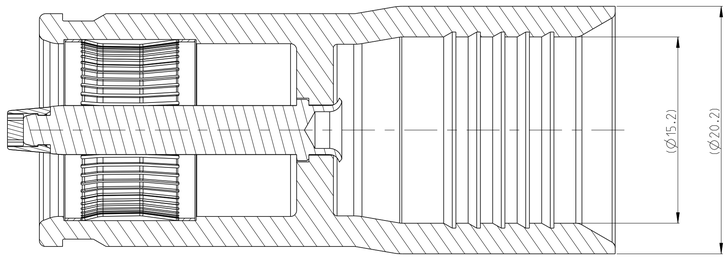

SECTION SHOWN
PN 2386340-2

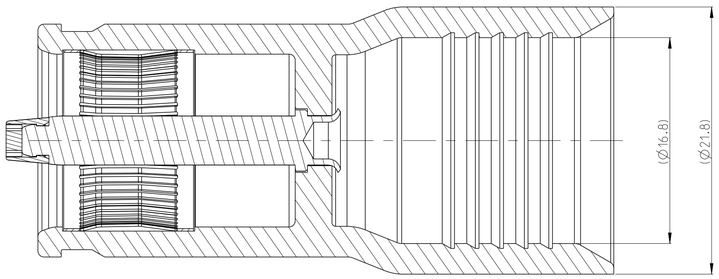

SECTION SHOWN
PN 2386340-3

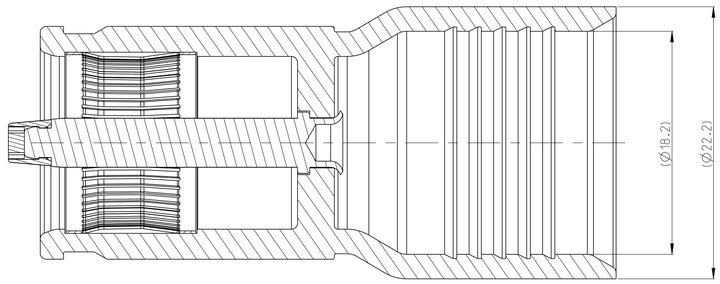

SECTION SHOWN
PN 2386340-4

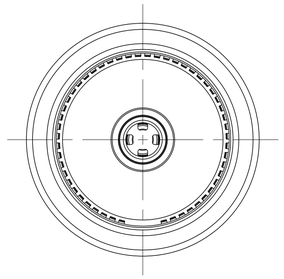

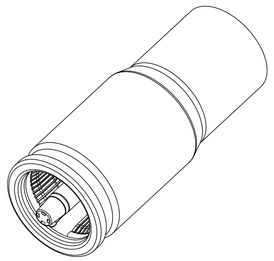

SCALE 2:1

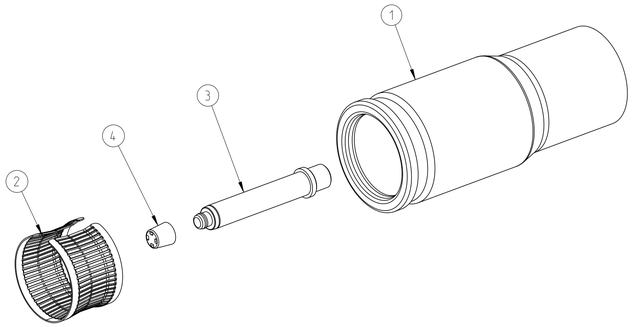

ISOMETRIC VIEW
SCALE 2:1

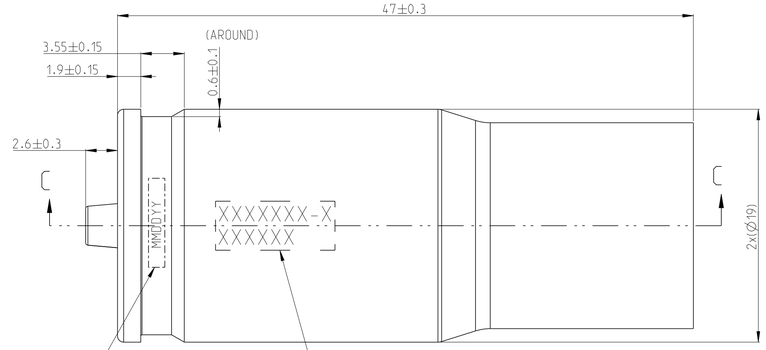

B 6 SUPPLIER D/C MARKING
LETTERING AREA
1 CONTENT
MM: MONTH
DD: DAY
YY: YEAR
2 EXAMPLE
011525 (MMDDYY)

LETTERING AREA
1 CONTENT:
THE FIRST LINE:PART NO.
THE SECOND LINE:CODE DATE
2 EXAMPLE:
2386340-1 (PART NO.)
083122 (MMDDYY)

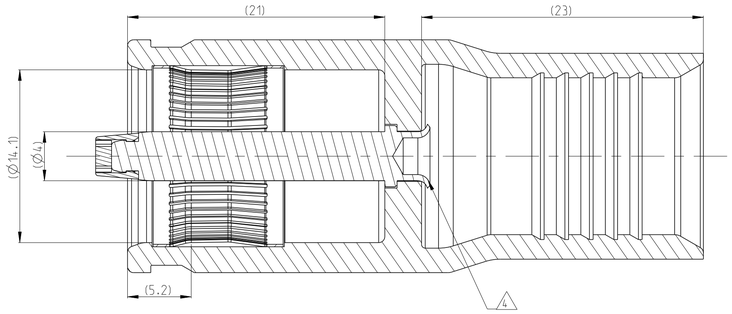

SECTION C-C

NOTES:

1 MATERIAL: DETAILED INFORMATION SHOWN IN TABLE.

2 ALL DIMENSIONS ARE CHECKED AFTER PLATING.

3 CRACK IS PERMITTED IN RIVET PROCESS. BUT NO LOOSEING OCCURS PERMITTED.

4 MATED PIN:2399589-1/2/3.2399646-1.

5 PACKAGE: TRAY.

B 6 SUPPLIER DATE CODED: MMDDYY
EXAMPLE: 011525 (MMDDYY)

1	1	1	1	-	PA66	CAP	2383439-2	A	4
1	1	1	1	BLANK	STAINLESS STEEL	PROTECTION PIN	2383442-2	B	3
1	1	1	1	Ag OVER Ni	CuNi3SiMg	CONTACT SPRING	2386339-1	A	2
1				Ag OVER Ni	Cu-TeP	SOCKET BODY, 150mm²(H+S)	2386338-4	B	1
	1			Ag OVER Ni	Cu-TeP	SOCKET BODY, 120mm²(H+S)	2386338-3	B	1
		1		Ag OVER Ni	Cu-TeP	SOCKET BODY, 95mm²(H+S)	2386338-2	B	1
			1	Ag OVER Ni	Cu-TeP	SOCKET BODY, 70mm²(H+S)	2386338-1	B	1
				FINISH	MATERIAL	DESCRIPTION	PART NO.	REV.	ITEM
2386340-4	2386340-3	2386340-2	2386340-1	PART LIST					
B	B	B	B	PART REV.(HVP HD1400 CONTACT)					

THIS DRAWING IS A CONTROLLED DOCUMENT.

DIMENSIONS: mm

TOLERANCES UNLESS OTHERWISE SPECIFIED:
0 PLC ±0.3
1 PLC ±0.1
2 PLC ±0.1
3 PLC ±-
4 PLC ±-
ANGLES ±5°

MATERIAL: SEE TABLE

FINISH: -

DWN	J.HUANG	03-Mar-25
CHK	W.Z.MA	03-Mar-25
APVD	W.D.ZHANG	03-Mar-25

PRODUCT SPEC: 108-160345
APPLICATION SPEC: 114-94737
WEIGHT: -

TE Connectivity

NAME: HVP HD1400 CONTACT (EMPT VERSION)

SIZE	CAGE CODE	DRAWING NO	RESTRICTED TO
A1	00779	C-2386340	-

CUSTOMER DRAWING | SCALE 1:1 | SHEET 1 OF 1 | REV B