THIS DRAWING IS UNPUBLISHED. RELEASED FOR PUBLICATION -
© COPYRIGHT - BY - ALL RIGHTS RESERVED.

REVISIONS

P	LTR	DESCRIPTION	DATE	DWN	APVD
	A	RELEASED PER ECO 20-012206	9-1-20	CT	DH

1. HOUSING: LCP, UL94V0, COLOR: BLACK.
   CONTACT: PHOSPHOR BRONZE.
   POST: BRASS WIRE
2. CONTACT: 1.27µm MIN GOLD IN PAD CONTACT AREA
   1.27µm MIN TIN-LEAD (97/3) ON PCB TAIL
   OVER 1.27µm MIN NICKEL OVER ALL.
   POST 1.27µm MIN NICKEL PLATED.
3. PLATED THROUGH HOLE PER 114-163004 FIGURE 10 OR
   114-13056, FIGURE 4
4. SEE TABLE 1 FOR INTERCONNECTIONS TO
   BACKPLANE CONNECTOR.
5. CONTACT: 1.27µm MIN GOLD IN PAD CONTACT AREA,
   1.27µm MIN TIN ON PCB TAIL OVER 1.27µm MIN.
   NICKEL OVER ALL.
   POST: 1.27µm MIN NICKEL PLATED.
6. CONTACT: 1.27µm MIN GOLD IN PAD CONTACT AREA
   1.27µm MIN TIN-LEAD (60/40) ON PCB TAIL
   OVER 1.27µm MIN NICKEL OVER ALL.
   POST 1.27µm MIN NICKEL PLATED.

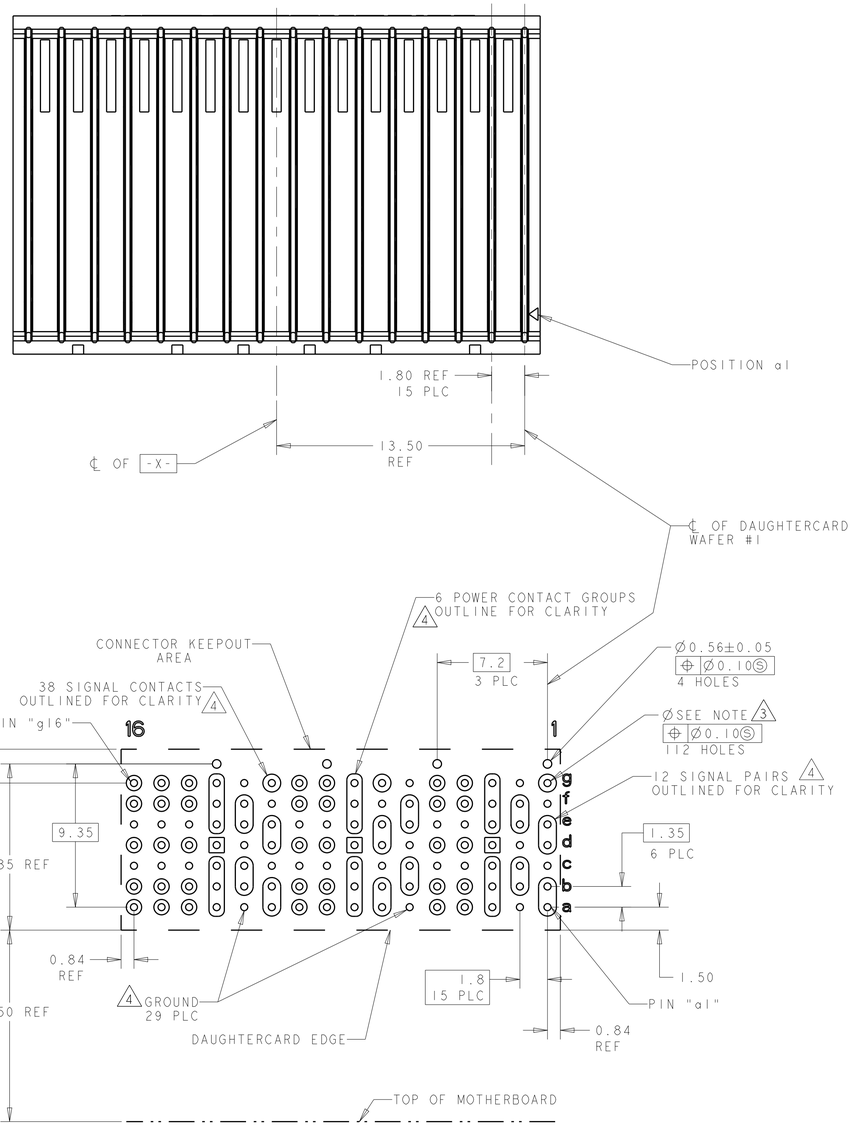

PC BOARD LAYOUT
(CONNECTOR SIDE)
SCALE 5:1

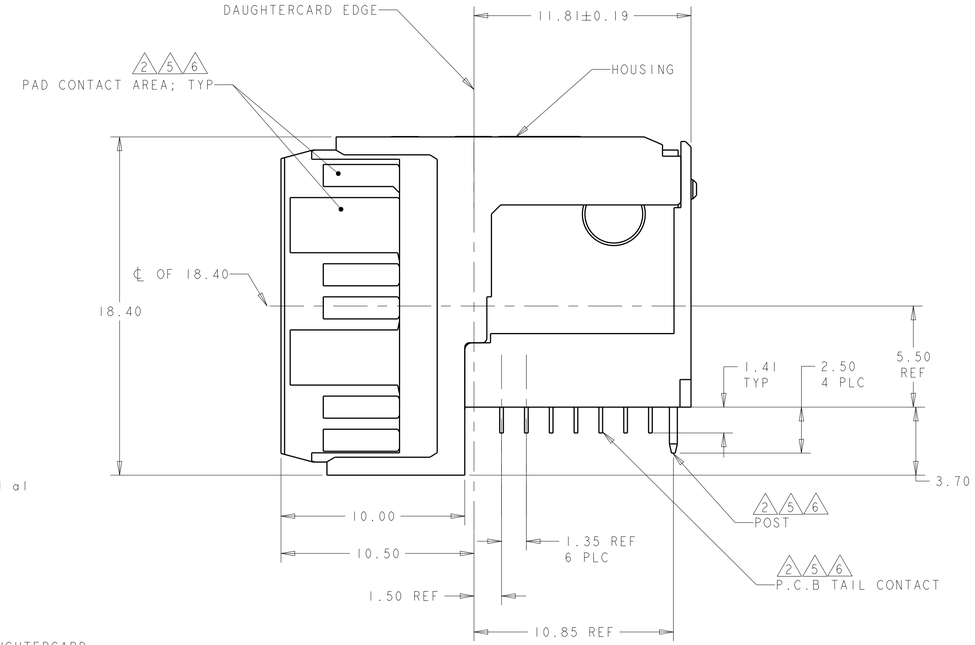

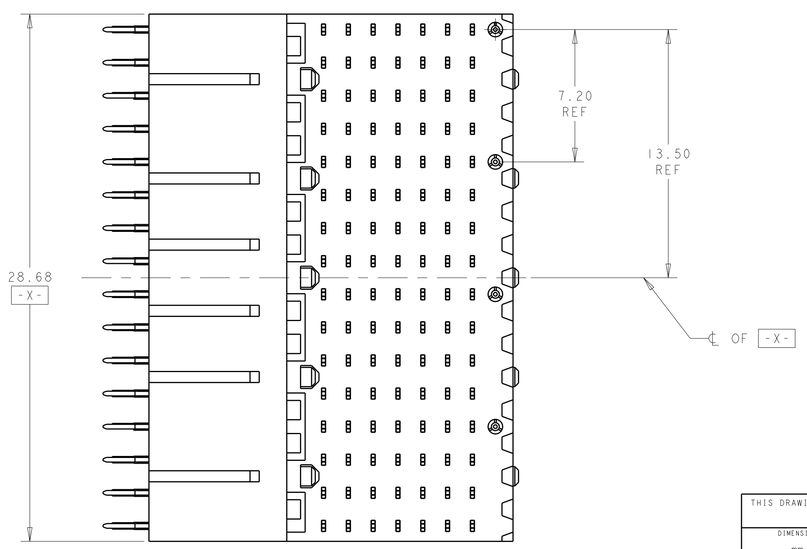

TABLE 1
"x" DESIGNATES THE COLUMN NUMBER

TYPICAL INTERCONNECTIONS FOR COLUMN (WAFER) 1,7 & 11		
CONTACT USAGE	DAUGHTERCARD CONNECTOR PIN	BACKPLANE CONNECTOR PIN
SIGNAL PAIR	ax	ax
	bx	bx
SIGNAL PAIR	dx	ex
	ex	fx
SIGNAL	gx	ix
GROUNDS	cx, fx (ALL COMMONED)	cx, dx, gx, hx

TYPICAL INTERCONNECTIONS FOR COLUMN (WAFER) 2,6 & 12		
CONTACT USAGE	DAUGHTERCARD CONNECTOR PIN	BACKPLANE CONNECTOR PIN
SIGNAL PAIR	bx	cx
	cx	dx
SIGNAL PAIR	ex	gx
	fx	hx
GROUNDS	ax, dx, gx (ALL COMMONED)	ax, bx, ex, fx, ix

TYPICAL INTERCONNECTIONS FOR COLUMN (WAFER) 4,5,9,10,14,15 & 16		
CONTACT USAGE	DAUGHTERCARD CONNECTOR PIN	BACKPLANE CONNECTOR PIN
SIGNAL	ax	bx
SIGNAL	bx	cx
SIGNAL	dx	ex
SIGNAL	fx	gx
SIGNAL	gx	hx
GROUNDS	cx, ex (ALL COMMONED)	ax, dx, fx, ix

TYPICAL INTERCONNECTIONS FOR COLUMN (WAFER) 3,8 & 13		
CONTACT USAGE	DAUGHTERCARD CONNECTOR PIN	BACKPLANE CONNECTOR PIN
POWER	ax,bx,cx	ax,bx,cx,dx
POWER	ex,fx,gx	fx,gx,hx,ix
NOT CONNECTED	dx	ex

PLATING	PART NO
6	2378582-3
5	2378582-2
2	2378582-1

THIS DRAWING IS A CONTROLLED DOCUMENT.

DIMENSIONS: mm

TOLERANCES UNLESS OTHERWISE SPECIFIED:
0 PLC ±-
1 PLC ±0.5
2 PLC ±0.13
3 PLC ±-
4 PLC ±-
ANGLES ±1°0'

MATERIAL 1

FINISH - SEE TABLE

DWN C.C.THOMAS 8-26-20
CHK D.HOANG 8-26-20
APVD D.HOANG 8-26-20
PRODUCT SPEC 108-2072
APPLICATION SPEC 114-163004 OR 114-13056
WEIGHT 10.33g
CUSTOMER DRAWING

TE Connectivity

NAME RIGHT-ANGLE PLUG ASSEMBLY, 7 ROW, MODULE 16F, 20.3mm, MULTIGIG RT2-R, DAUGHTERCARD CONNECTOR, VITA 78

SIZE A1 CAGE CODE 00779 DRAWING NO C-2378582 RESTRICTED TO

SCALE 6:1 SHEET 1 OF 1 REV A

4805 (3/13)