© 2019 TE Connectivity. All Rights Reserved.

| REVISIONS | | | | | |
|---|---|---|---|---|---|
| P | LTR | DESCRIPTION | DATE | DWN | APVD |
| | 3 | UPDATED FINISH | 28DEC2020 | DF | DR |
| | 4 | ADDED OVER-ALL DIMS | 14MAY2021 | DF | DR |
| | 5 | ADD DUST CAP | 02JUL2021 | CG | DR |
| | 6 | ADD NICKEL PTFE ASSEMBLIES | 30JAN2023 | CG | DR |
| | A | RELEASED PER ECN-23-223282 | 27JUL2023 | MM | DR |
| | B | ECN-24-277652 | 7AUG2024 | TWH | JS |
| | | | | | |

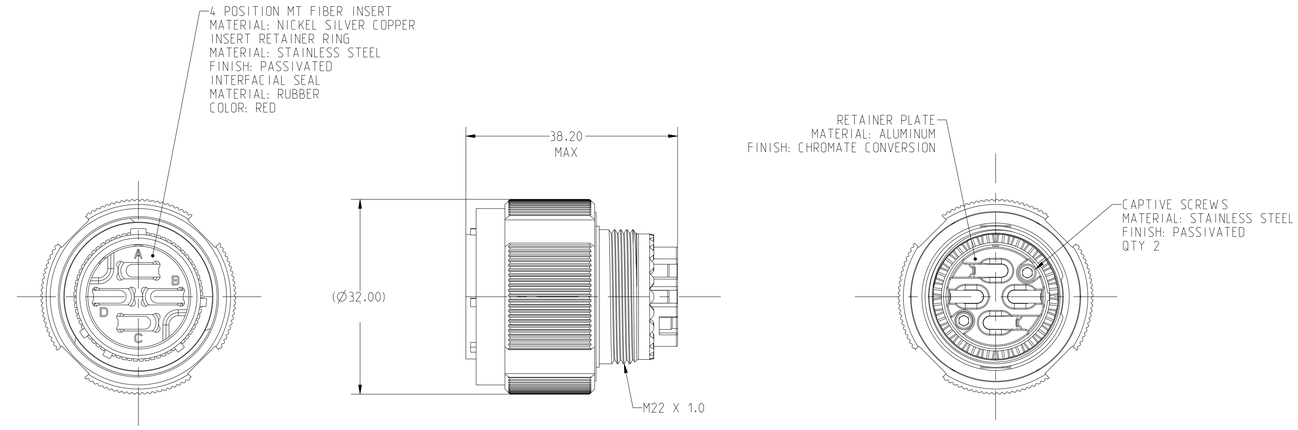


1. FINISH: OLIVER DRAB. CADMIUM.
2. FINISH: NICKEL. ELECTROLESS
3. FINISH: NICKEL PTFE
4. FINISH: BLACK ZINC

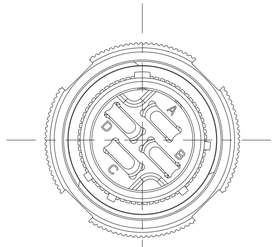


45 DEGREE
INSERT OPTION

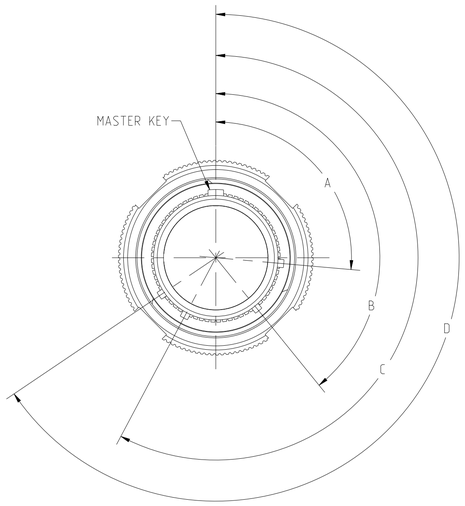


| KEYING ORIENTATION | A | B | C | D |
|---|---|---|---|---|
| N | 95° | 141° | 208° | 236° |
| A | 113° | 156° | 182° | 292° |
| B | 90° | 145° | 195° | 252° |

KEYING ORIENTATION DETAIL

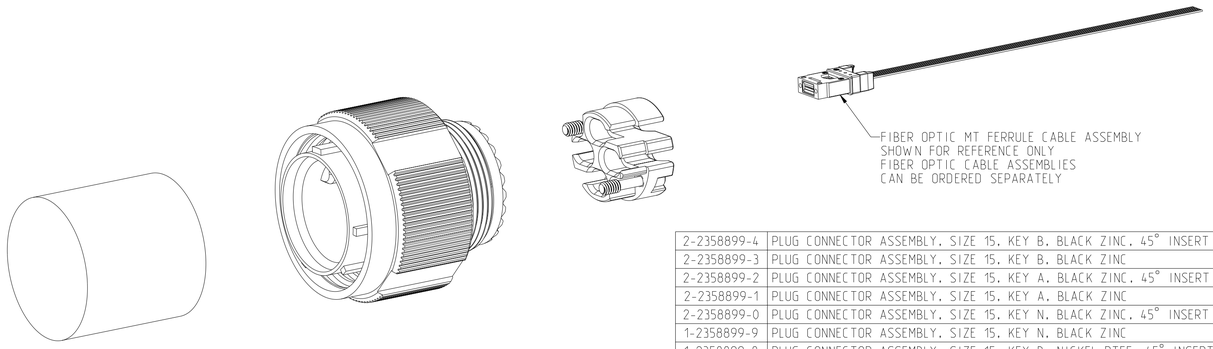


| ASSEMBLY PART NUMBER | DESCRIPTION | |
|---|---|---|
| 2-2358899-4 | PLUG CONNECTOR ASSEMBLY, SIZE 15, KEY B, BLACK ZINC, 45° INSERT | 4 |
| 2-2358899-3 | PLUG CONNECTOR ASSEMBLY, SIZE 15, KEY B, BLACK ZINC | 4 |
| 2-2358899-2 | PLUG CONNECTOR ASSEMBLY, SIZE 15, KEY A, BLACK ZINC, 45° INSERT | 4 |
| 2-2358899-1 | PLUG CONNECTOR ASSEMBLY, SIZE 15, KEY A, BLACK ZINC | 4 |
| 2-2358899-0 | PLUG CONNECTOR ASSEMBLY, SIZE 15, KEY N, BLACK ZINC, 45° INSERT | 4 |
| 1-2358899-9 | PLUG CONNECTOR ASSEMBLY, SIZE 15, KEY N, BLACK ZINC | 4 |
| 1-2358899-8 | PLUG CONNECTOR ASSEMBLY, SIZE 15, KEY B, NICKEL PTFE, 45° INSERT | 3 |
| 1-2358899-7 | PLUG CONNECTOR ASSEMBLY, SIZE 15, KEY B, NICKEL PTFE | 3 |
| 1-2358899-6 | PLUG CONNECTOR ASSEMBLY, SIZE 15, KEY A, NICKEL PTFE, 45° INSERT | 3 |
| 1-2358899-5 | PLUG CONNECTOR ASSEMBLY, SIZE 15, KEY A, NICKEL PTFE | 3 |
| 1-2358899-4 | PLUG CONNECTOR ASSEMBLY, SIZE 15, KEY N, NICKEL PTFE, 45° INSERT | 3 |
| 1-2358899-3 | PLUG CONNECTOR ASSEMBLY, SIZE 15, KEY N, NICKEL PTFE | 3 |
| 1-2358899-2 | PLUG CONNECTOR ASSEMBLY, SIZE 15, KEY B, NICKEL, 45' INSERT | 2 |
| 1-2358899-1 | PLUG CONNECTOR ASSEMBLY, SIZE 15, KEY B, NICKEL | 2 |
| 1-2358899-0 | PLUG CONNECTOR ASSEMBLY, SIZE 15, KEY B, OLIVE DRAB, 45' INSERT | 1 |
| 2358899-9 | PLUG CONNECTOR ASSEMBLY, SIZE 15, KEY B, OLIVE DRAB | 1 |
| 2358899-8 | PLUG CONNECTOR ASSEMBLY, SIZE 15, KEY A, NICKEL, 45' INSERT | 2 |
| 2358899-7 | PLUG CONNECTOR ASSEMBLY, SIZE 15, KEY A, NICKEL | 2 |
| 2358899-6 | PLUG CONNECTOR ASSEMBLY, SIZE 15, KEY A, OLIVE DRAB, 45' INSERT | 1 |
| 2358899-5 | PLUG CONNECTOR ASSEMBLY, SIZE 15, KEY A, OLIVE DRAB | 1 |
| 2358899-4 | PLUG CONNECTOR ASSEMBLY, SIZE 15, KEY N, NICKEL, 45' INSERT | 2 |
| 2358899-3 | PLUG CONNECTOR ASSEMBLY, SIZE 15, KEY N, NICKEL | 2 |
| 2358899-2 | PLUG CONNECTOR ASSEMBLY, SIZE 15, KEY N, OLIVE DRAB, 45' INSERT | 1 |
| 2358899-1 | PLUG CONNECTOR ASSEMBLY, SIZE 15, KEY N, OLIVE DRAB | 1 |

THIS DRAWING IS A CONTROLLED DOCUMENT.

DIMENSIONS: mm

TOLERANCES UNLESS OTHERWISE SPECIFIED:
0 PLC ±-
1 PLC ±-
2 PLC ±0.13
3 PLC ±0.013
4 PLC ±-
ANGLES ±1

MATERIAL -
FINISH 1 - 2

DWN 16JUL2019 D. FABIAN
CHK -
APVD -
PRODUCT SPEC -
APPLICATION SPEC -
WEIGHT -

TE Connectivity

NAME KIT, PLUG CONNECTOR ASSEMBLY FIBER OPTIC, MT, SIZE 15, 4 CAVITY 38999 STYLE

| SIZE | CAGE CODE | DRAWING NO | RESTRICTED TO |
|---|---|---|---|
| A1 | 00779 | C-2358899 | - |

CUSTOMER DRAWING | SCALE 2:1 | SHEET 1 OF 1 | REV B

4805 (3/13)