© 2019 TE Connectivity. All Rights Reserved.

REVISIONS					
P	LTR	DESCRIPTION	DATE	DWN	APVD
	A	INITIAL RELEASE	18SEP2019	V.T	I.Y
	B	ECR-20-004362	10APR2020	V.T	E.J
	C	ECR-20-015258	01JUN2021	V.T	Z.Z

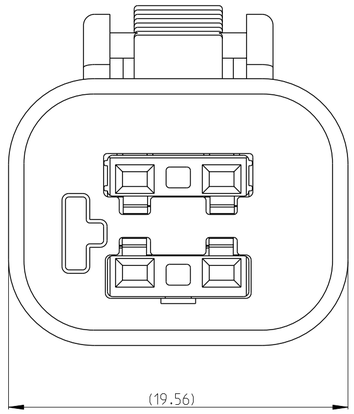

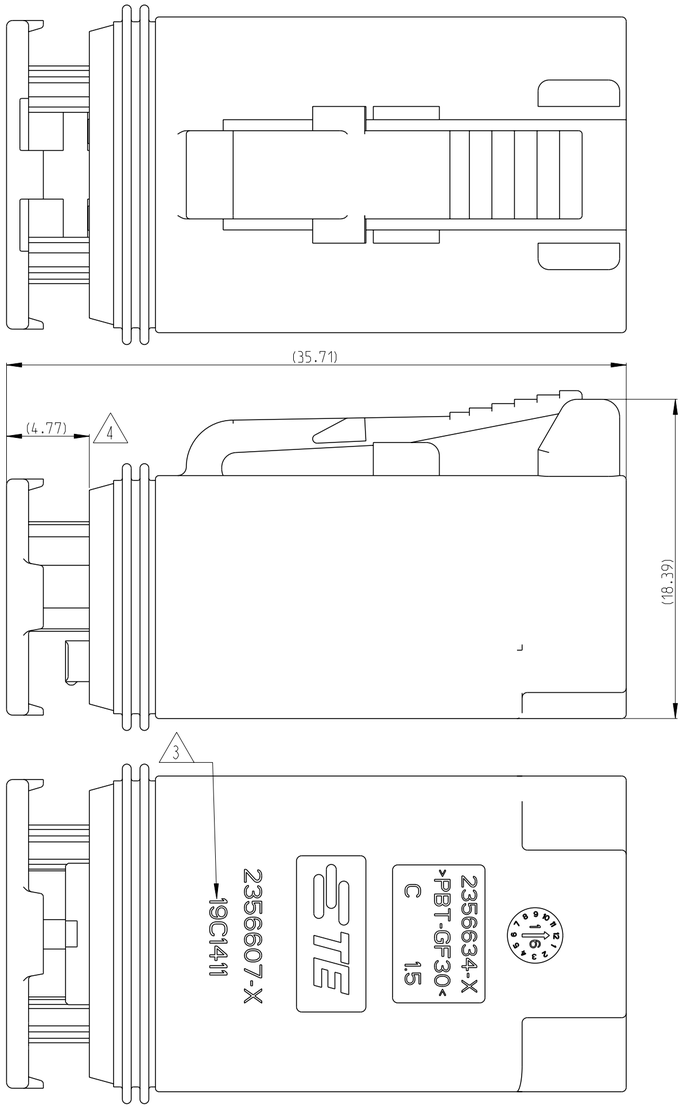

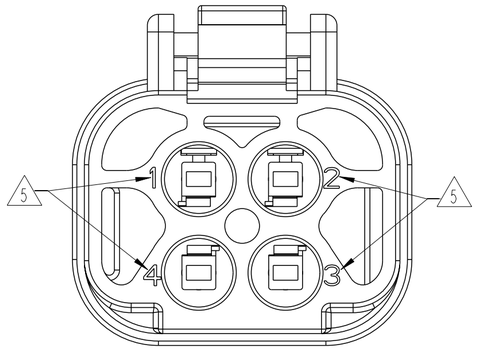

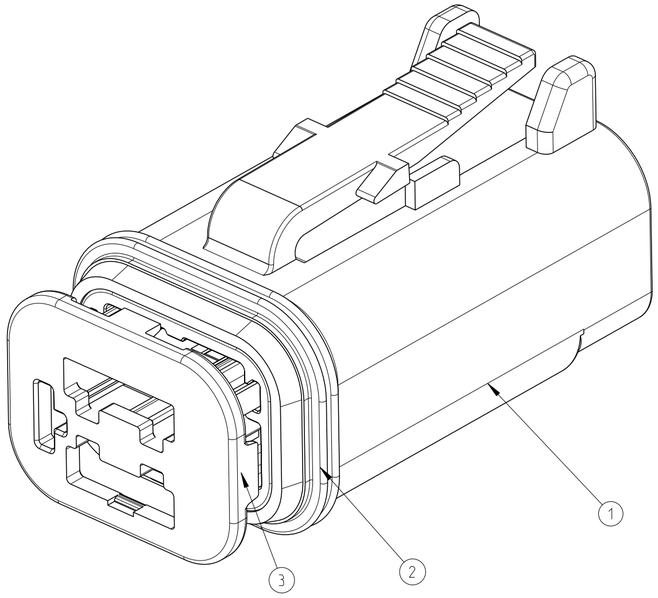

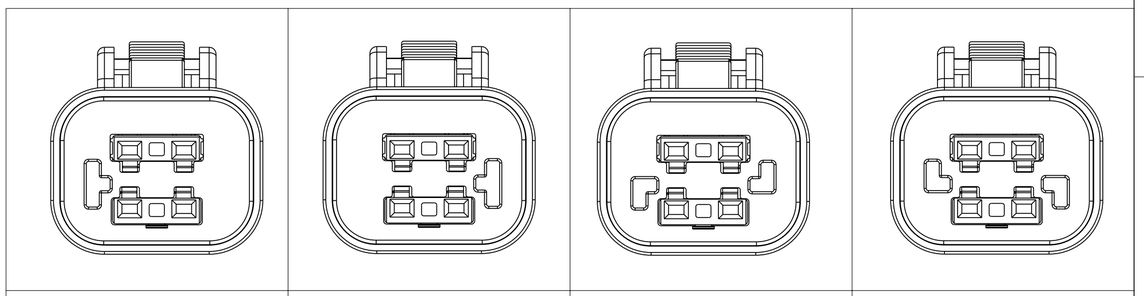

CODING A	CODING B	CODING C	CODING D
PN:2356607-1 (V0) 2-2356607-1 (HB)	PN:2356607-2 (V0) 2-2356607-2 (HB)	PN:2356607-3 (V0) 2-2356607-3 (HB)	PN:2356607-4 (V0) 2-2356607-4 (HB)

NOTES:

1.PLUG 2356607-X MATES WITH 2356631-X RECEPTACLE (X=1, 2, 3, 4 FOR RELEVANT CODE).
PLUG 2-2356607-X MATES WITH 2-2356631-X RECEPTACLE (X=1, 2, 3, 4 FOR RELEVANT CODE).

2.MATERIAL: HOUSING: PBT GF30, SEE TABLE FOR COLOR
TPA: PBT GF30, SEE TABLE FOR COLOR
FRONT SEAL: VMQ(RED-ORANGE)

3. DATE CODE: INDENTIFIES THE YEAR, MONTH, DAY AND HOUR OF ASSEMBLY.
YEAR: FIRST AND SECOND DIGITS(19=2019)
MONTH: THIRD DIGIT , EXCLUDING I , A=JAN, B=FEB, C=MARCH...(K=OCTOBER)
DAY: FOURTH AND FIFTH DIGITS(14=14th DAY)
HOUR: SIXTH AND SEVENTH DIGITS(11=11AM)

4. PULL TPA TO PRE-LOCK BEFORE TERMINAL INSERTION IN CASE OF TPA BEING HIT TO END-LOCK POSITION.

5. WIRE NO.

6.APPLICABLE TERMINAL PART NUMBERS AND WIRE SIZE:

TERMINAL PN	TERMINAL PLATING	APPLICATION	WIRE SIZE (MM2)	INSULATION WIRES(MM)	SWS P/N	BLIND PLUG P/N
1418844-1	TIN	GENERAL (USCAR-2 V2)	0.35	Ø1.10~Ø1.40	963142-2	963143-1
1418844-3	SILVER	HIGH VIBRATION (USCAR-2 V3)				
1670146-1	TIN	GENERAL (USCAR-2 V2)	0.5~0.75	Ø1.40~Ø1.90	963142-1	963143-1
1670146-3	SILVER	HIGH VIBRATION (USCAR-2 V3)				
1418850-1	TIN	GENERAL (USCAR-2 V2)	1.0~1.5	Ø1.90~Ø2.40	963142-1	963143-1
1418850-3	SILVER	HIGH VIBRATION (USCAR-2 V3)				

1				1				BLUE	PBT-GF30	TPA,CODE D	3
	1				1			NATURAL	PBT-GF30	TPA,CODE C	
		1				1		GREEN	PBT-GF30	TPA,CODE B	
			1				1	YELLOW	PBT-GF30	TPA,CODE A	
1	1	1	1	1	1	1	1	RED-ORANGE	SILICONE	FRONT SEAL	2
1	1	1	1					GRAY	PBT-GF30	HOUSING	1
				1	1	1	1	BLACK	PBT-GF30		
QTY. REQUEST PER ASSY								COLOR	MATERIAL	DESCRIPTION	ITEM NO
7.5	7.5	7.5	7.5	8.0	8.0	8.0	8.0	WEIGHT OF EACH ASSY NO. (g)			
C	C	C	C	C	C	C	C	REVISION OF EACH ASSY NO.			
2-2356607-4 (HB)	2-2356607-3 (HB)	2-2356607-2 (HB)	2-2356607-1 (HB)	2356607-4 (V0)	2356607-3 (V0)	2356607-2 (V0)	2356607-1 (V0)	TE ASSEMBLY PN			

THIS DRAWING IS A CONTROLLED DOCUMENT.

DIMENSIONS: mm

TOLERANCES UNLESS OTHERWISE SPECIFIED:
0 PLC ±-
1 PLC ±0.25
2 PLC ±0.15
3 PLC ±-
4 PLC ±-
ANGLES ±-

MATERIAL -
-

FINISH -
-

DWN	V. TANG	18SEP2019
CHK	E. JIANG	18SEP2019
APVD	I. YIN	18SEP2019
PRODUCT SPEC	108-32189	
APPLICATION SPEC	114-32258	
WEIGHT	-	

TE Connectivity

NAME SUPERSEAL PRO 4POS.PLUG ASSEMBLY MCON1.2,CB TEMINAL

SIZE	CAGE CODE	DRAWING NO	RESTRICTED TO
A2	00779	C-2356607	-

CUSTOMER DRAWING | SCALE 4:1 | SHEET 1 OF 2 | REV C

1471-9 (3/13)

© 2019 TE Connectivity. All Rights Reserved.

REVISIONS					
P	LTR	DESCRIPTION	DATE	DWN	APVD
	-	SEE SHEET 1	-	-	-

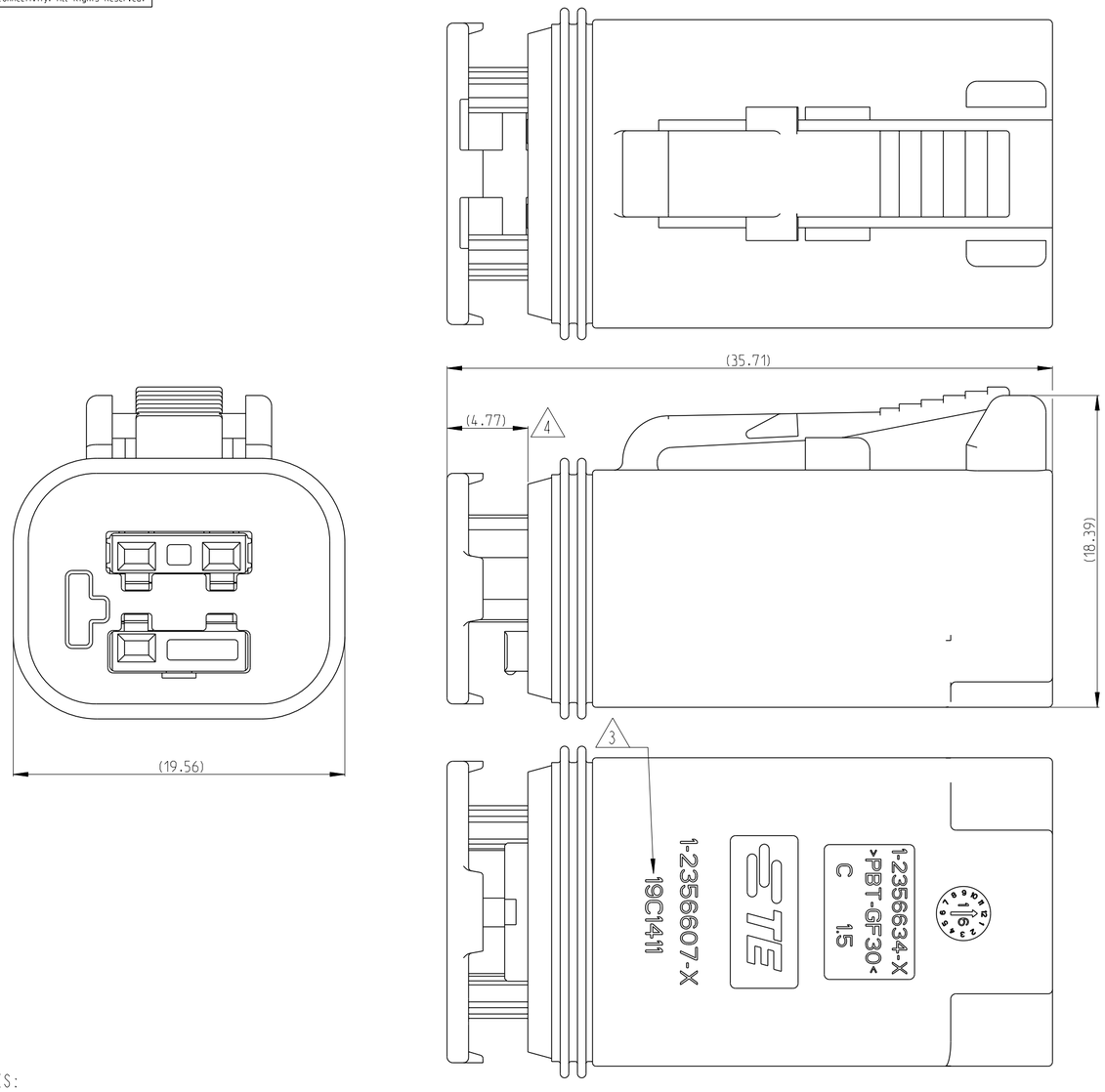

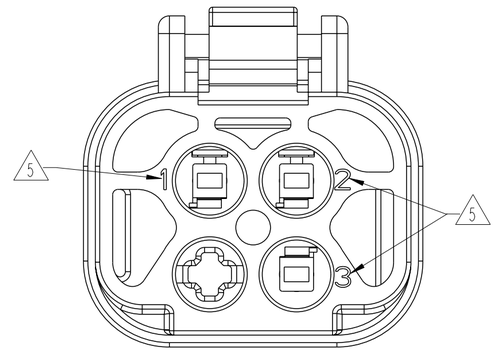

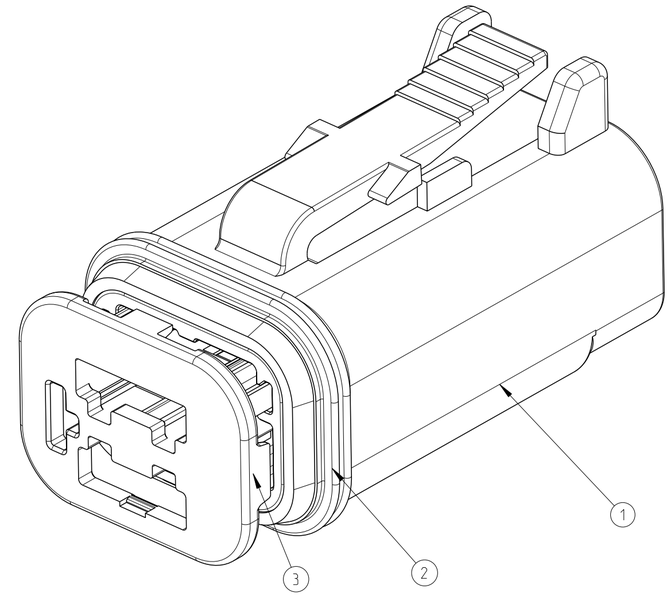

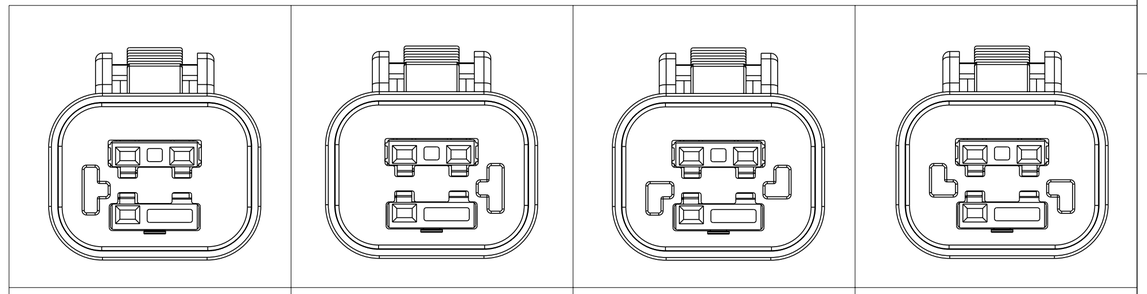

CODING A	CODING B	CODING C	CODING D
PN:1-2356607-1 (V0) 3-2356607-1 (HB)	PN:1-2356607-2 (V0) 3-2356607-2 (HB)	PN:1-2356607-3 (V0) 3-2356607-3 (HB)	PN:1-2356607-4 (V0) 3-2356607-4 (HB)

QTY. REQUEST PER ASSY								COLOR	MATERIAL	DESCRIPTION	ITEM NO
1				1				BLUE	PBT-GF30	TPA,CODE D	3
	1				1			NATURAL	PBT-GF30	TPA,CODE C	
		1				1		GREEN	PBT-GF30	TPA,CODE B	
			1				1	YELLOW	PBT-GF30	TPA,CODE A	
1	1	1	1	1	1	1	1	RED-ORANGE	SILICONE	FRONT SEAL	2
1	1	1	1					GRAY	PBT-GF30	HOUSING	1
				1	1	1	1	BLACK	PBT-GF30		
7.7	7.7	7.7	7.7	8.2	8.2	8.2	8.2	WEIGHT OF EACH ASSY NO. (g)			
C	C	C	C	C	C	C	C	REVISION OF EACH ASSY NO.			
3-2356607-4 (HB)	3-2356607-3 (HB)	3-2356607-2 (HB)	3-2356607-1 (HB)	1-2356607-4 (V0)	1-2356607-3 (V0)	1-2356607-2 (V0)	1-2356607-1 (V0)	TE ASSEMBLY PN			

NOTES:

1.PLUG 1-2356607-X MATES WITH 1-2356631-X RECEPTACLE (X=1, 2, 3, 4 FOR RELEVANT CODE).
PLUG 3-2356607-X MATES WITH 3-2356631-X RECEPTACLE (X=1, 2, 3, 4 FOR RELEVANT CODE).

2.MATERIAL: HOUSING: PBT GF30, SEE TABLE FOR COLOR
TPA: PBT GF30, SEE TABLE FOR COLOR
FRONT SEAL: VMQ(RED-ORANGE)

3 DATE CODE: INDENTIFIES THE YEAR, MONTH, DAY AND HOUR OF ASSEMBLY.
YEAR: FIRST AND SECOND DIGITS(19=2019)
MONTH: THIRD DIGIT , EXCLUDING I , A=JAN, B=FEB, C=MARCH...(K=OCTOBER)
DAY: FOURTH AND FIFTH DIGITS(14=14th DAY)
HOUR: SIXTH AND SEVENTH DIGITS(11=11AM)

4 PULL TPA TO PRE-LOCK BEFORE TERMINAL INSERTION IN CASE OF TPA BEING HIT TO END-LOCK POSITION.

5 WIRE NO.

6.APPLICABLE TERMINAL PART NUMBERS AND WIRE SIZE:

TERMINAL PN	TERMINAL PLATING	APPLICATION	WIRE SIZE (MM2)	INSULATION WIRES(MM)	SWS P/N	BLIND PLUG P/N
1418844-1	TIN	GENERAL (USCAR-2 V2)	0.35	Ø1.10~Ø1.40	963142-2	963143-1
1418844-3	SILVER	HIGH VIBRATION (USCAR-2 V3)				
1670146-1	TIN	GENERAL (USCAR-2 V2)	0.5~0.75	Ø1.40~Ø1.90	963142-1	963143-1
1670146-3	SILVER	HIGH VIBRATION (USCAR-2 V3)				
1418850-1	TIN	GENERAL (USCAR-2 V2)	1.0~1.5	Ø1.90~Ø2.40	963142-1	963143-1
1418850-3	SILVER	HIGH VIBRATION (USCAR-2 V3)				

THIS DRAWING IS A CONTROLLED DOCUMENT.

DIMENSIONS: mm

TOLERANCES UNLESS OTHERWISE SPECIFIED:
0 PLC ±
1 PLC ±0.25
2 PLC ±0.15
3 PLC ±
4 PLC ±
ANGLES ±

MATERIAL -
-

FINISH -
-

DWN V. TANG 18SEP2019
CHK E. JIANG 18SEP2019
APVD L. YIN 18SEP2019
PRODUCT SPEC 108-32189
APPLICATION SPEC 114-32258
WEIGHT -

TE Connectivity

NAME SUPERSEAL PRO 3POS,PLUG ASSEMBLY
MCON1.2,CB TEMINAL

SIZE	CAGE CODE	DRAWING NO	RESTRICTED TO
A2	00779	C-2356607	-

CUSTOMER DRAWING | SCALE 4:1 | SHEET 2 OF 2 | REV C